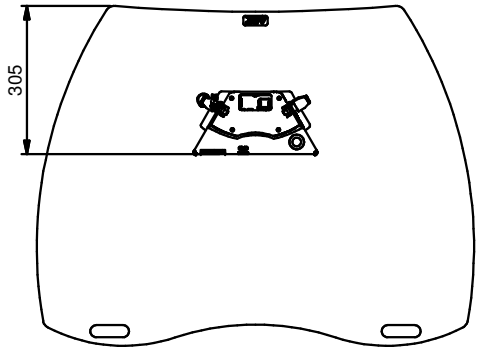

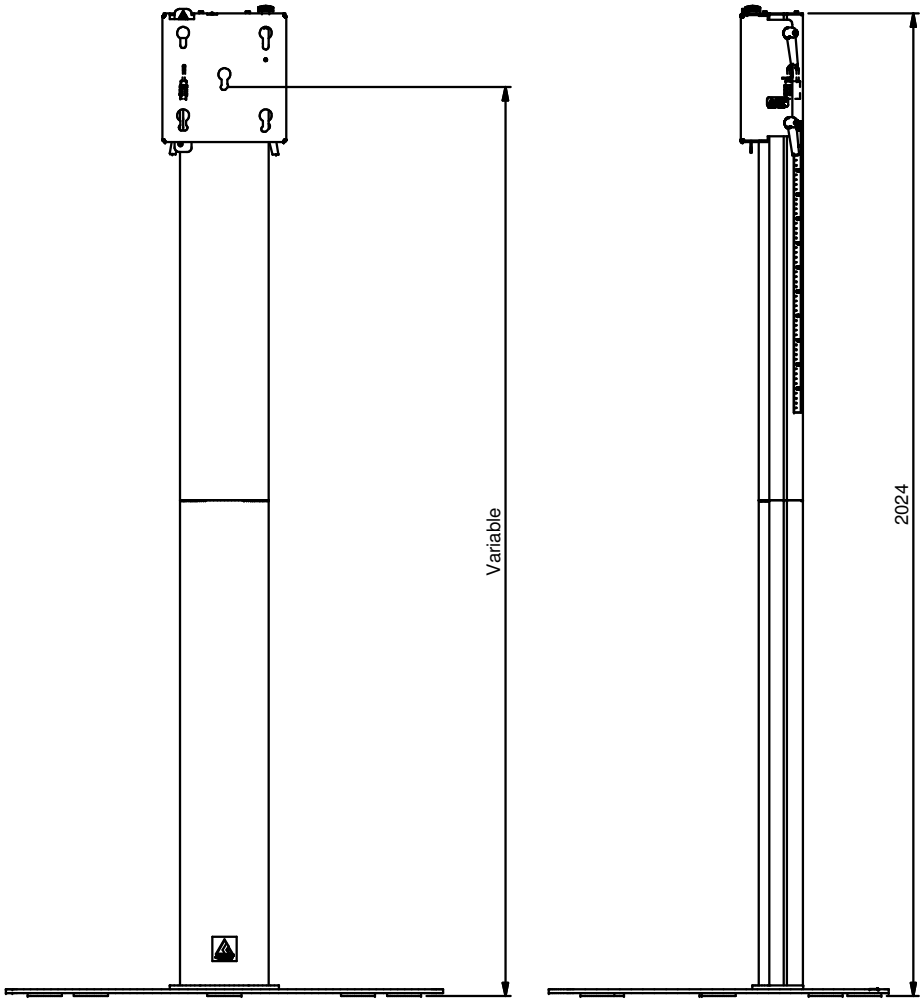

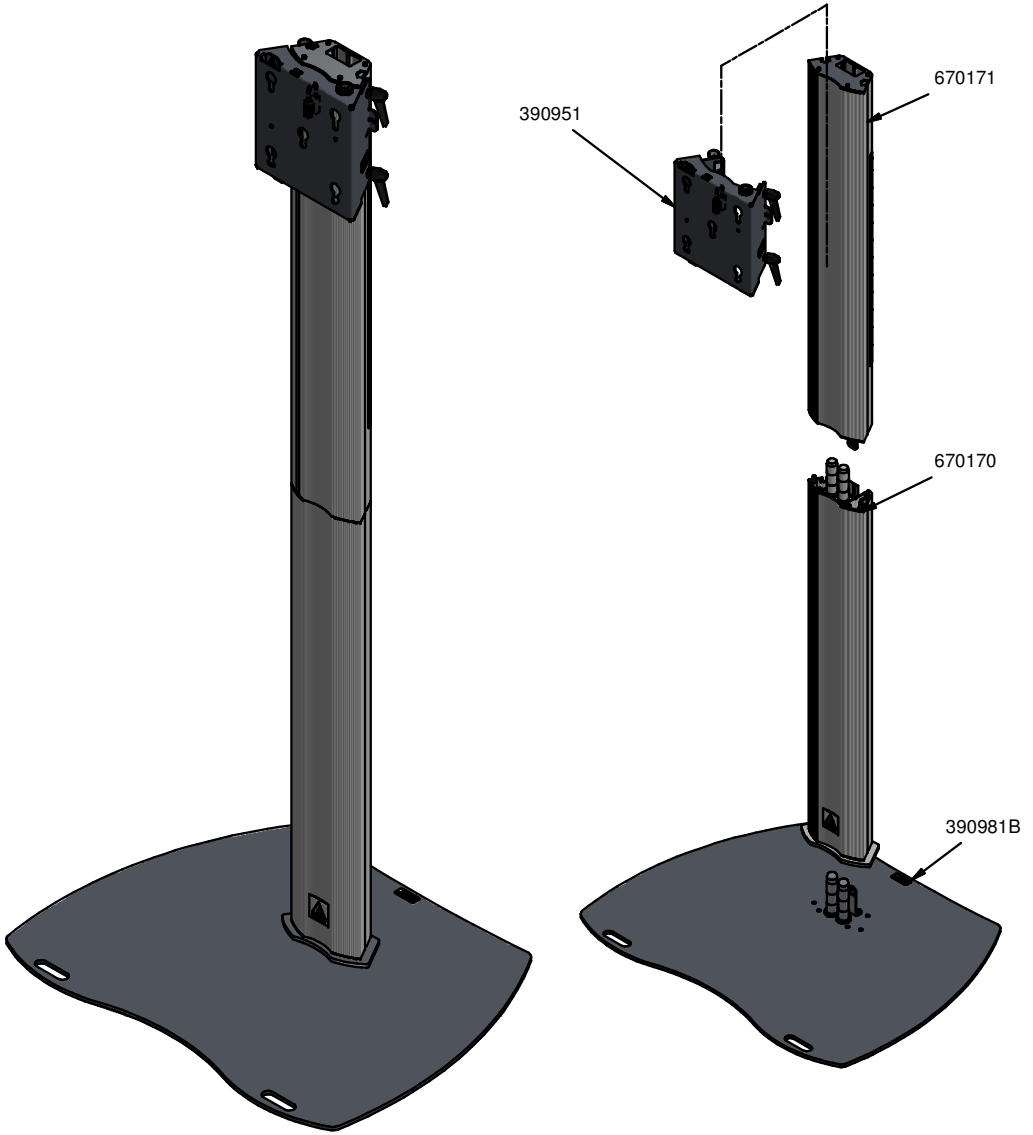

Dimensions are indications, not to be used for any preparations. No rights can be derived from the above dimensions.

NOTE: All dimensions are ±..., in mm and subject to change

© COPYRIGHT AUDIPACK
This print and the information shown thereon, is the property of AUDIPACK.
It may not be delivered to others nor reproduced for general circulation without the written consent of the AUDIPACK engineering department.

AUDIPACK
Industriestraat 2-4
2751 GT Moerkapelle
the Netherlands
Tel: +31(0)795931671
Fax: +31(0)795933115
www.audipack.com

PRESENTATION
390942

FLAT PANEL FLOOR STAND