CARTONI

PROFESSIONAL CAMERA SUPPORT

P90

USER'S MANUAL & Maintenance



Thank you for choosing the **P90 PEDESTAL** manufactured by **CARTONI S.p.A.**

The **P90 PEDESTAL** is designed and built using state-of-the-art technologies and procedures in order to guarantee maximum reliability over time, as well as total safety for its users.



! In order to properly and safely use the **P90** Pedestal read this manual very carefully and follow the instructions.

! All back-up material, and this manual in particular, should be stored in a safe place for future reference.

! This publication may not be reproduced in full or in part, or memorised, transmitted or translated into any common or computer language, in any form or by any electronic, mechanical, magnetic, optical, chemical, manual or other means without the express authorization in writing of **CARTONI**.

! **CARTONI** holds the right to revise or change this publication without any prior advice to any person or organization.

CONTENTS

1. INTRODUCTION 4
- 1.1 PROPER USE 4
- 1.2 WARRANTY 5
- 1.3 AUTHORIZED PERSONNEL 5
- 1.4 REGULATORY INFORMATION 5
- 1.5 DOCUMENTATION 7

2. OPERATING ELEMENTS 8
- 2.1 SPECIFICATIONS 12
- 2.2 COMPATIBLE EQUIPMENT 13
- 2.3 USAGE 14

3. INSTALLATION AND SETTINGS 14
- 3.1 SET-UP 16
- 3.2 PRESSURIZING THE PEDESTAL AND BALANCING THE LOAD 18
- 3.3 TRIM WEIGHTS 18

4. USING THE PEDESTAL 19
- 4.1 HEIGHT ADJUSTMENT 19
- 4.2 CABLE GUARDS 19
- 4.3 TRAVELLING 20
- 4.4 SAFETY PRECAUTIONS 23

5. DISASSEMBLING AND STORAGE 25

6. SERVICE 26
- 6.1 ROUTINE MAINTENANCE 26
- 6.2 EXTRA MAINTENANCE AND SPARE PARTS 26
- 6.3 WHEEL EXCHANGE RECOMENDATION 27
- 6.3 DECOMMISIONING 28

1. Introduction

The correct and safe use of this Pedestal is only guaranteed if it is used in accordance with the following manual and other documentation that accompanies the **P90** Pedestal. It is therefore essential to read all the documentation carefully and to keep it in a safe place.

Although the equipment features safety devices not all the risks inherent its improper use can be avoided.

It is necessary to always make sure that all operators have completely read and under-stood the instructions. **CARTONI** accepts no responsibility for damage to persons and/or property consequent to the improper use of the Pedestal.

Do not remove or deface any label, indication and warning affixed to the Pedestal.

CARTONI declines all responsibility for the failure to observe the standards of safety and prevention detailed in the various sections of this manual and for injuries caused due to improper use.

Any modification to the Pedestal must have prior authorization by **CARTONI**.

All the standard maintenance operations (maintenance, repairs, cleaning and adjustments) should be carried out by competent personnel as prescribed in the manual.

1.1 Proper use

The **P90** has been designed and built for the support and movement of a Head with Camera/lenses mounted on its horizontal and vertical axis.

In particular this manual refers to the machine specifications in section 2.



! It is strictly forbidden to use the Pedestal in any other way other than indicated.

! The components used must conform to the indications in section 2.

! Do not remove or deface any label, indication or warning affixed to the machine.

! Any modification to the Pedestal and/or its structure and/or accessories must have prior authorization by **CARTONI**.

! Before using this Pedestal the manual should be read carefully. Whoever uses the machine must be well informed on the operative capacity and limits outlined in the manual.

1.2 Warranty

The **P90** Pedestal is covered by a warranty against manufacturing defects for 5 years from the date of shipment (three years basic warranty + two years upon online registration to www.cartoni.com).

The warranty covers replacement of any defective part and the labour required excluding transport/duty costs.

In the case of replacement of single parts, these can be supplied free of charge by **CARTONI** but the owner will bear the cost of transport/duty charges for the parts.

The warranty is only valid if the Pedestal has been used properly as outlined in the manufacturer's instructions and has not been exposed to any mishandling. The warranty will be immediately invalid if modifications and/or repairs are carried out by unauthorized persons otherwise authorized by **CARTONI**.

Components subject to wear and tear are not covered by the warranty.

The warranty is also invalidated by one of the following events:

- Failure to comply with payment conditions;
- Failure to carry out appropriate maintenance;
- Removal or mistreatment of marks and/or labels containing data and technical specification.

CARTONI accepts no responsibility for damage to the Pedestal caused by improper use or the malfunction of other equipment connected to the Camera support.

In any case, the warranty only covers Pedestal damage and/or malfunctions and does not entitle the purchaser/owner to claim any damages for loss of production time due to assumed or proven damage caused by and/or connected to the Pedestal itself.

1.3 Authorized personnel

Extraordinary maintenance and repairs to the machine can only be carried out by competent persons who are either employed, trained or authorized by **CARTONI** in writing.

Any information regarding repair/maintenance service stations can be obtained from **CARTONI**.

1.4 Regulatory information

The design and construction of the Pedestal by **CARTONI** complies with the regulations listed below:

- UNI EN ISO 12100 (2010) Safety of machinery - General principles for design – Risk assesment and risk reduction.
- Directive 2006/42/CE Covering the harmonization of member States' laws on machinery.
- Presidential Decree 17/2010 of 27/01/2010: Regulation implementing EU directive 2006/42/CE and subsequent amendments.

Additional technical standards relating to specific safety measures as the UNI EN ISO 13857:2015 concerning safety distance and the UNI EN ISO 13850:2015 concerning the emergency machine stop have been considered.

CISQ is a member of IQNET
The International Certification Network
www.iqnet-certification.com

CERTIFICATO N. / *CERTIFICATE No.* OHS-5117

Per informazioni sulla validità del certificato, visitare il sito www.rina.org

For information concerning validity of the certificate, you can visit the site www.rina.org

SI CERTIFICA CHE IL SISTEMA DI GESTIONE DELLA SICUREZZA E DELLA SALUTE SUL LUOGO DI LAVORO DI
IT IS HEREBY CERTIFIED THAT THE OCCUPATIONAL HEALTH AND SAFETY MANAGEMENT SYSTEM OF

CARTONI S.P.A.

VIA DI PORTONACCIO, 33/B 00159 ROMA (RM) ITALIA

NELLE SEGUENTI UNITÀ OPERATIVE */ IN THE FOLLOWING OPERATIONAL UNITS*

VIA DI PORTONACCIO, 33/B 00159 ROMA (RM) ITALIA

È CONFORME ALLA NORMA */ IS IN COMPLIANCE WITH THE STANDARD*

ISO 45001:2018

PER I SEGUENTI CAMPI DI ATTIVITÀ / *FOR THE FOLLOWING FIELD(S) OF ACTIVITIES*

6

IAF:17
IAF:29

PROGETTAZIONE, FABBRICAZIONE ED ASSISTENZA POST-VENDITA DI PRODOTTI PER LA CINEMATOGRAFIA E LA TELEVISIONE PROFESSIONALE. COMMERCIALIZZAZIONE DI PRODOTTI ED ACCESSORI IN CONCESSIONE PER LA CINEMATOGRAFIA E LA TELEVISIONE PROFESSIONALE

DESIGN, MANUFACTURE AND POST-SALE ASSISTANCE OF PROFESSIONAL BROADCAST AND FILM EQUIPMENT. MARKETING OF PROFESSIONAL BROADCAST AND FILM ACCESSORIES AND PRODUCTS AS LOCAL AGENCY/REPRESENTATIVE

La validità del presente certificato è subordinata a sorveglianza periodica annuale / semestrale ed al riesame completo del sistema di gestione con periodicità triennale
The validity of this certificate is dependent on an annual / six monthly audit and on a complete review, every three years, of the management system
L'uso e la validità del presente certificato è soggetto al rispetto del documento RINA: Regolamento per la Certificazione dei Sistemi di Gestione della Sicurezza e Salute sul luogo di lavoro
The use and validity of this certificate are subject to compliance with the RINA document: Rules for the Certification of Occupational Health and Safety Management Systems

Prima emissione / *First Issue* 04.10.2023

Data scadenza / *Expiry Date* 03.10.2026

Data revisione / *Revision date* 04.10.2023

Amilcare Rini
Rome Management System Certification, Head

RINA Services S.p.A.
Via Corsica 12 - 16128 Genova Italy

SCR N° 003 F
Membro degli Accordi di Mutuo Riconoscimento EA, IAF e ILAC
Signatory of EA, IAF and ILAC Mutual Recognition Agreements

www.cisq.com
CISQ è la Federazione Italiana di Organismi di Certificazione dei sistemi di gestione aziendale
CISQ is the Italian Federation of management system Certification Bodies

Form CERSGSE-2022

1.5 Documentation

This manual is supplied with the Pedestal along with the warranty card and both must be saved for any further consultation or use.

The present manual can be downloaded from www.cartoni.com website.

In case of sale or transferring ownership of the Pedestal, the manual and warranty card must be handed over to the new operator or owner.

The Pedestal designed and built by **CARTONI** has passed the final test performed at the factory to verify functional features, dimensional characteristics and durability.

Test results are saved by internal records and relate to:

- Serial number and date of the test;
- List of compliance data to standard;
- Notes, attachments, specifications, etc.



! The Pedestal cannot be used unless it has been positively tested and operators fully trained.

2. Operating Elements

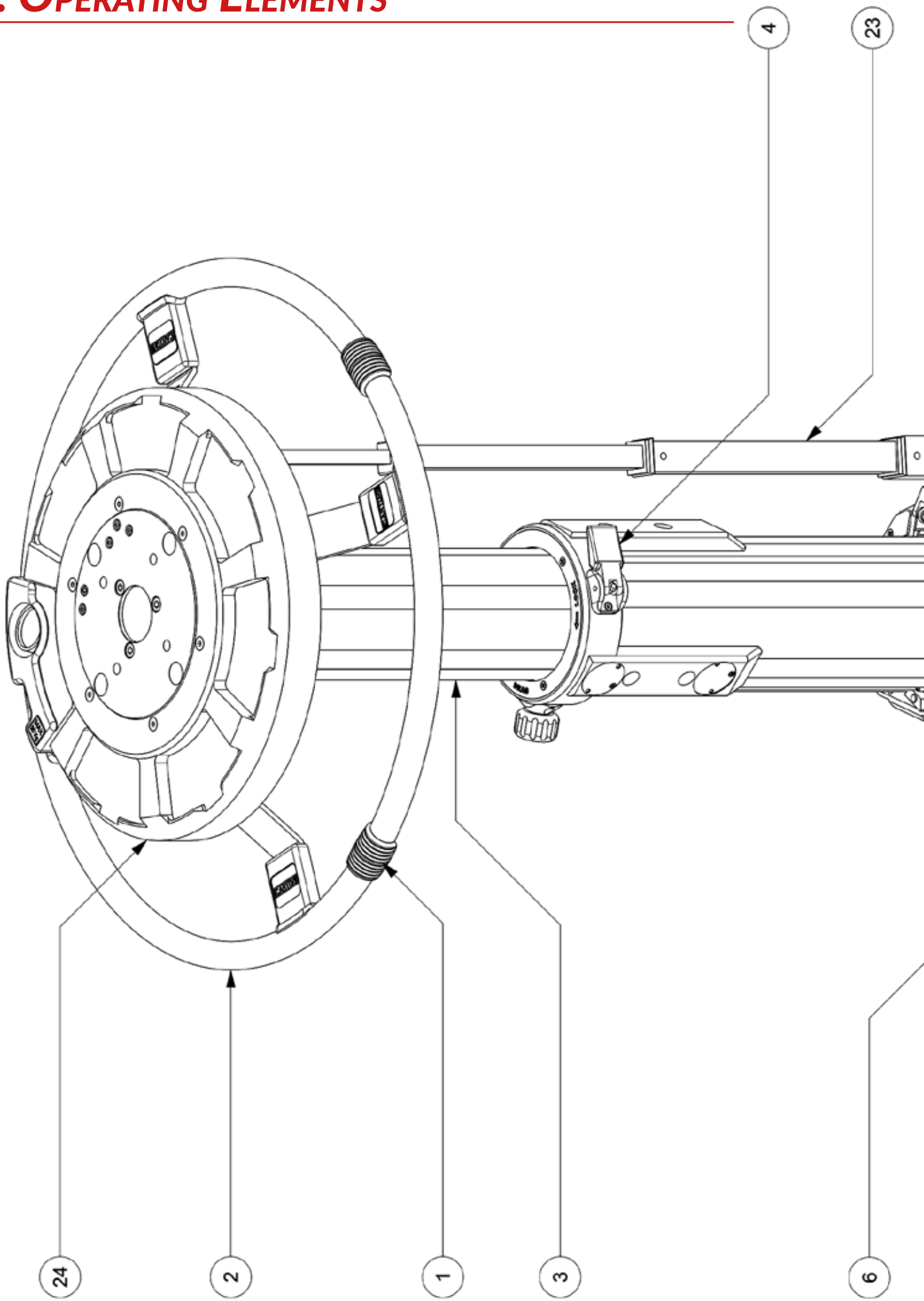

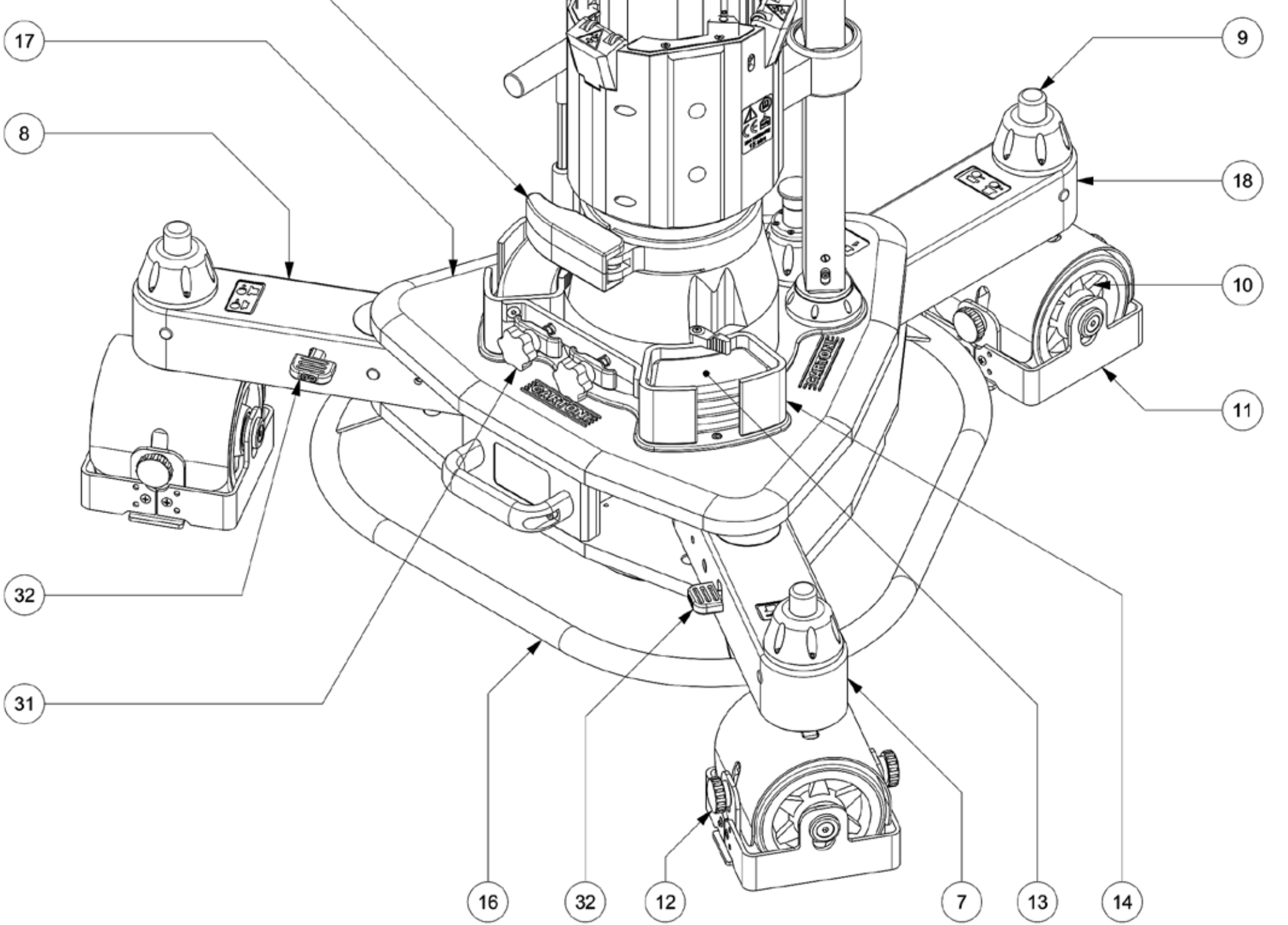
17
8
9
18
10
11
32
31
16
32
12
7
13
14

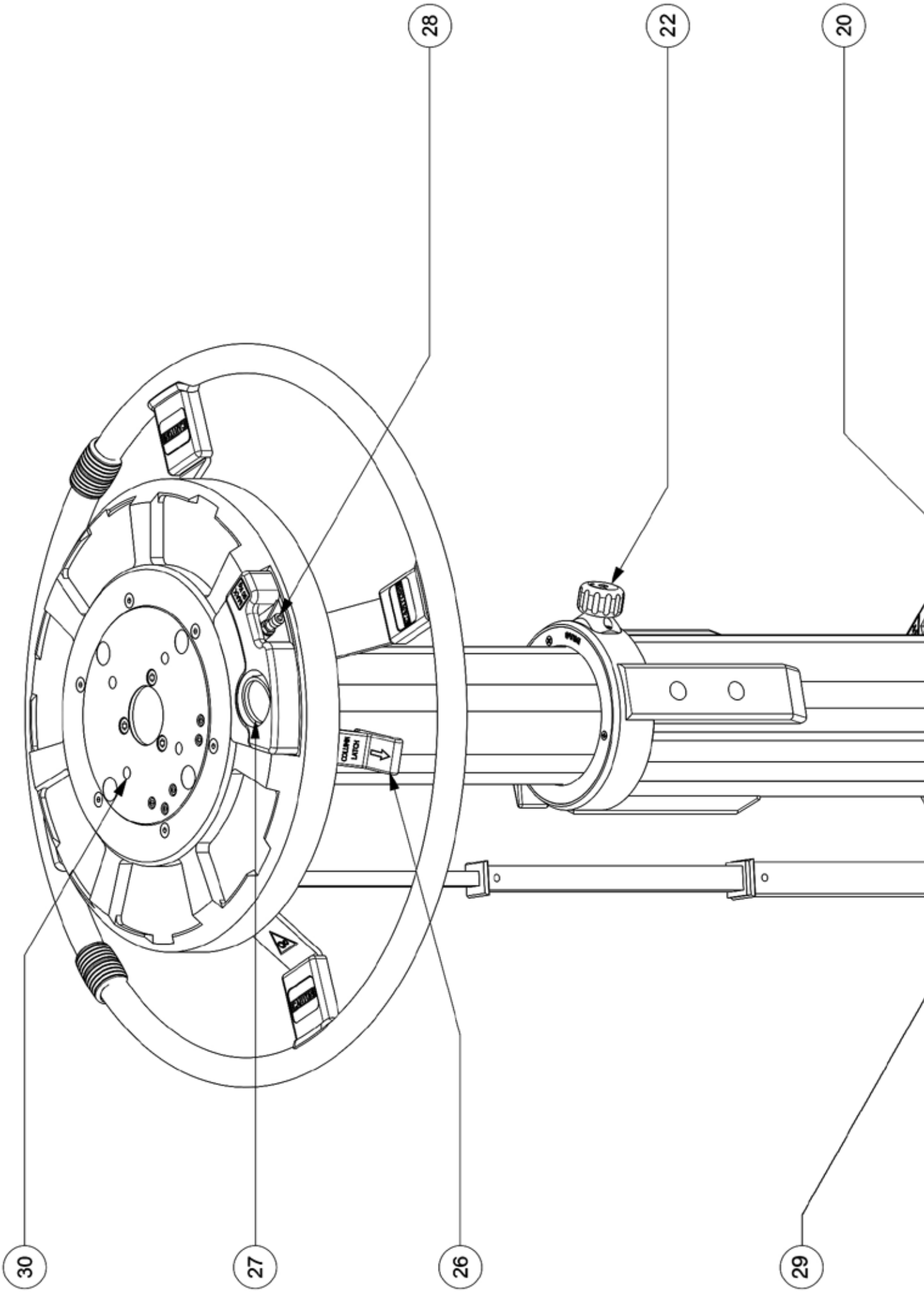
28
22
20
30
27
26
29

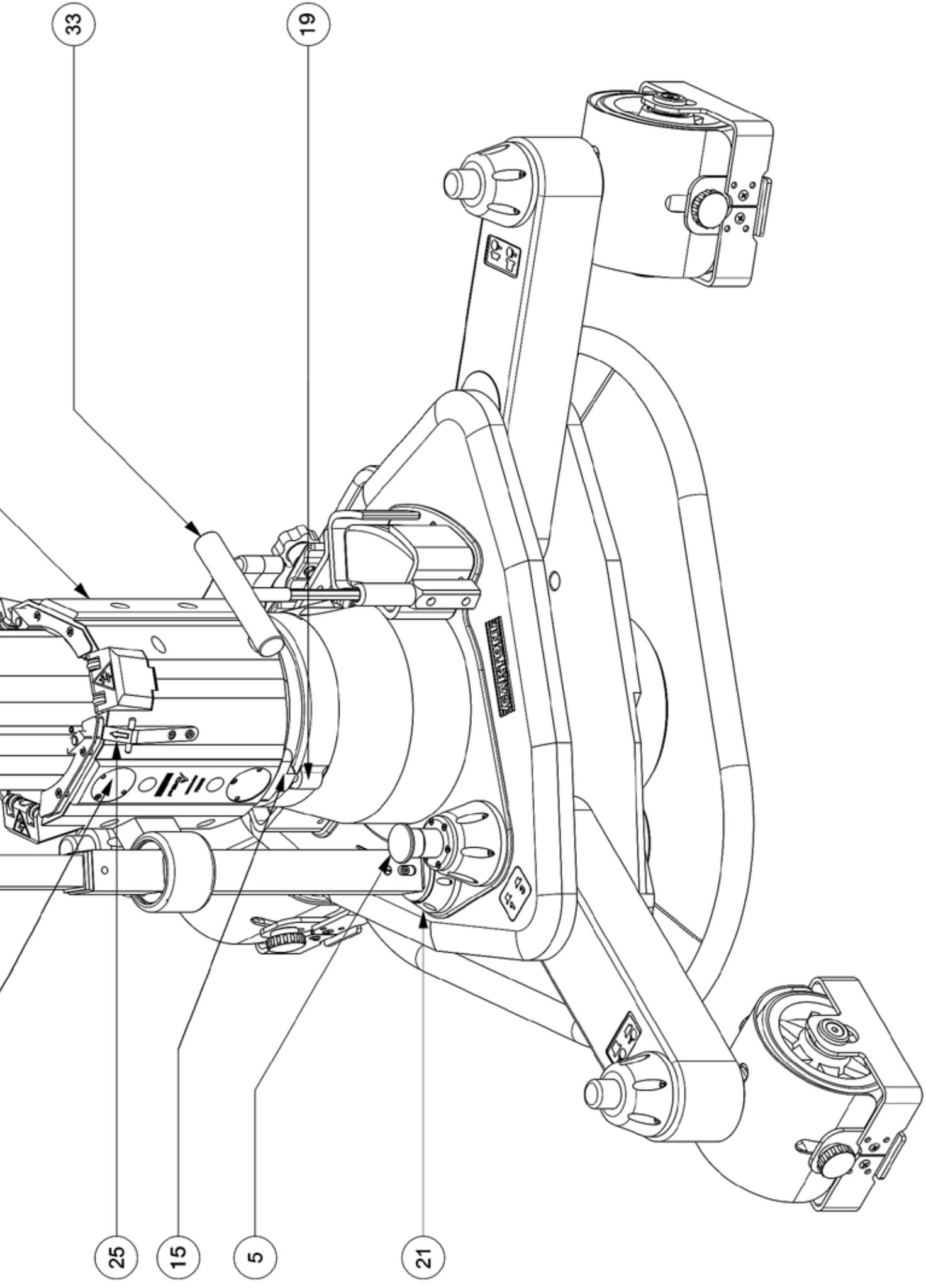
33
19
25
15
5
21

1 Steering wheel mark
2 Steering wheel
3 Extendable pneumatic column
4 Stroke lock
5 1/3 position
6 Skid clamp
7 Left skid leg
8 Right skid leg
9 Wheel lock
10 Studio wheel Ø125 mm
11 Cable guard
12 Cable guard knob
13 Trim weight
14 Trim weight stowage
15 Coupling pin (column skid)
16 Foot ring
17 Skid base
18 Central skid leg
19 Coupling hole
20 Fixed column
21 Mechanism seat (skid)
22 Drag control knob
23 Steering tube
24 Trim weight seat
25 Safety hooking bar
26 Safety latch
27 Gauge G1/8 - 20 Bar
28 Intake valve
29 Rope cap
30 4 bolt mounting plate
31 Cable fixing knob
32 Skid arm locking/unlocking lever
33 Hexagonal key

2.1 SPECIFICATIONS

Payload (up to)	90 Kg	198.4 lbs
Column weight	31 Kg	33.0 lbs
Accessories weight (steering wheel, foot ring)	10 Kg	22.0 lbs
Skid weight	29 Kg	63.9 lbs
Total weight	70 Kg	154.3 lbs
Trim weights (N. 6 x 1,3 Kg)	7,8 Kg	17.2 lbs
Minimum height	720 mm	28.3 in.
Maximum height	1460 mm	57.5 in.
On-shot stroke	740 mm	29.1 in.
Minimum height from ground	20 mm	0.79 in.
Doorway tracking width	970 mm	38.1 in.
Doorway tracking width (reduced position)	680 mm	26.8 in.
Wheel diameter	125 mm	4.9 in.
Optional OB wheel diameter	160 mm	6.3 in.
Steering wheel diameter	620 mm	24.4 in.
Skid leg radius	475 mm	18.7 in.
Max working pressure	15 Bar	217.5 Psi
Max safety valve pressure	15,5 Bar	224.8 Psi
Operational temperature	-20 / +60 °C	-4 / +140 °F

The equipment used with the **P90** Pedestal should comply with the following characteristics:

- Optimal weight (Camera + lens/accessories + fluid Head): <80 kg;
- Maximum weight (Camera + lens/accessories + fluid Head): 90 kg;
- Weight distribution must take in consideration that the center of gravity (CG) of the mounted elements stays well inside the rim of the wheelbase.

! The Pedestal should be only used to support the horizontal and vertical Camera movements of Cameras within the weights indicated above.

! **CARTONI** accepts no responsibility for malfunctions or damage to persons or equipment, gear, materials, etc. when used with equipment other than those indicated in the manual.

! DANGER: It is strictly forbidden to climb on the Pedestal to transport people.

Optional accessories for tilt Head mounting



AH935



AH856



AH951



AH863



AH863/150



AH845



AH846



A902

Details can be found on **www.cartoni.com**

2.3 Usage

The Pedestal has been designed to work in a clean, dry environment; furthermore the Pedestal must not be used in areas with fine dust or corrosive gases.



! The Pedestal is not designed to work in areas subject to atmospheric explosives, the presence of fine dust, corrosive gases, acids, corrosive agents or salt or sea salt; furthermore it is not suitable for use in presence of ionized radiation or non ionized radiation (x-rays, laser, micro-waves, ultra violet rays).

The working conditions are:

- Temperature range: -20° C / + 60° C (- 4° F/+140° F)
- Humidity: 30 – 95 % (without condensation)

If the environmental conditions are critical we advise to install an adequate air conditioning in the area to balance the humidity and temperature to acceptable levels.

The Pedestal needs no particular requirements for storage, but should be stored in a dry dust free closed place; these conditions should be ensured even during transportation.

If the storage area is dusty we advise to cover the Pedestal with a protective cover.

The Pedestal produces a very low level noise; anyway, the weighted equivalent acoustic pressure emitted by the Pedestal is below 70 dB (A).

3 Installation and Settings

The Pedestal has the following component parts for shipment:

1. Pedestal **P90** (column + skid + steering wheel)
2. 6 x trim weights
3. Hexagonal Allen key
4. **CARTONI** manual Air-pump

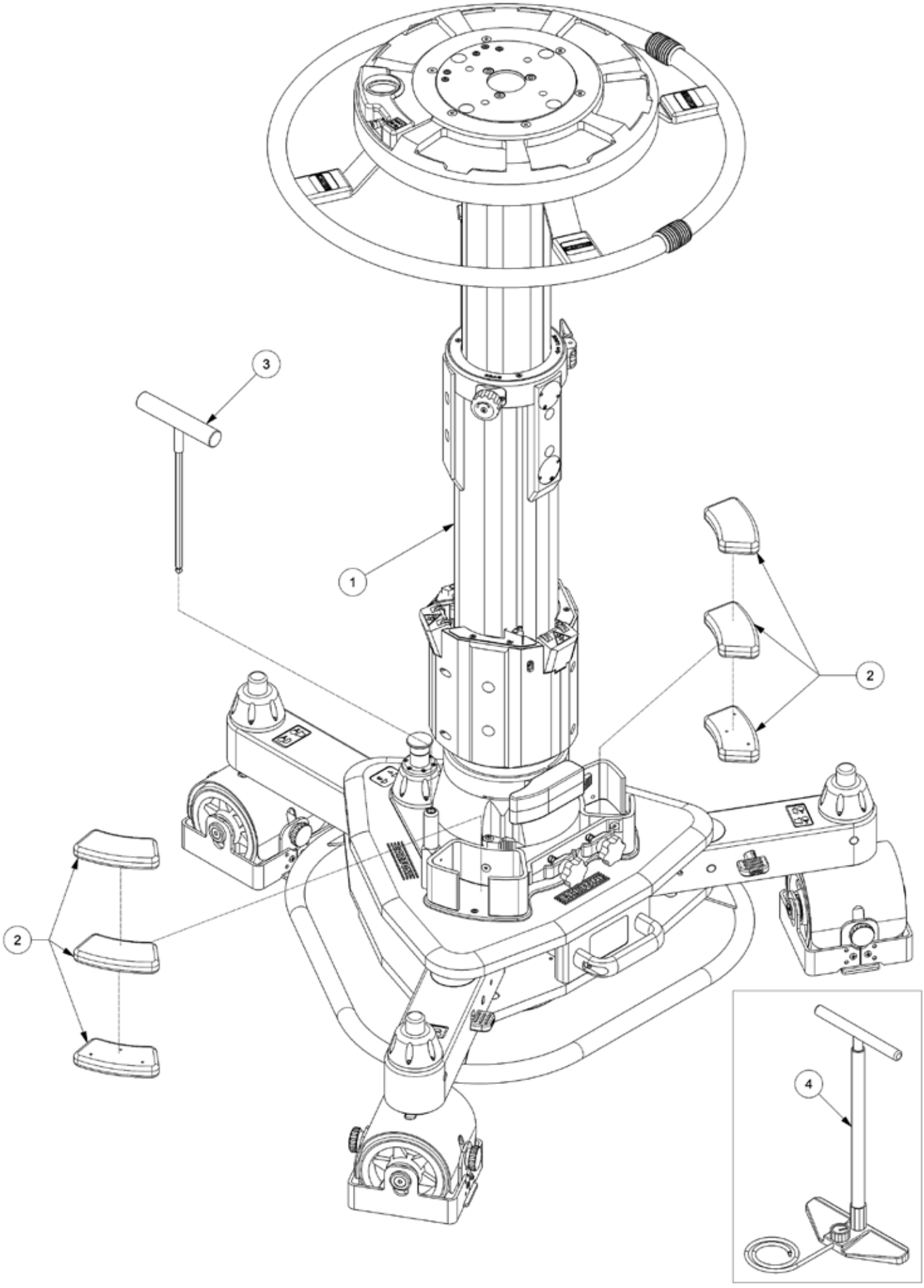
3
1
2
2
4

Prior to installation, please check the state of the packaging for its integrity on arrival, and also make sure that none of the components show signs of impact. If any such damage occurs **CARTONI** should be informed immediately.

If the product is to be forwarded elsewhere, it should be carefully packed and the greatest care should be taken not to damage any of the components.

The machine contains the following labeling and inscriptions:

- CE mark • Model • Type •Serial number

! It is strongly advised not to remove the labels found on the Pedestal; the labels must remain well fixed, maintained and readable.

! The information found on the Pedestal labels should be given whenever assistance or changes are needed.

! The installation must be carried out by qualified personnel.

! The product must be used on smooth horizontal flooring, able to hold the Pedestal weight and guarantee its stability.

! The flooring should be such as to guarantee the stability of the Pedestal, both in movement and at rest.

3.1 Set-Up

The Pedestal is shipped with the legs in narrow position.

Optimal operation is obtained with fully extended dolly at 120° angle.

Narrow position is used in reduced walkway only.

To modify the opening width of the dolly move the levers (32):

- Lift the lever and pull/push the arm till locking into position;
- Repeat the operation with the other arm.

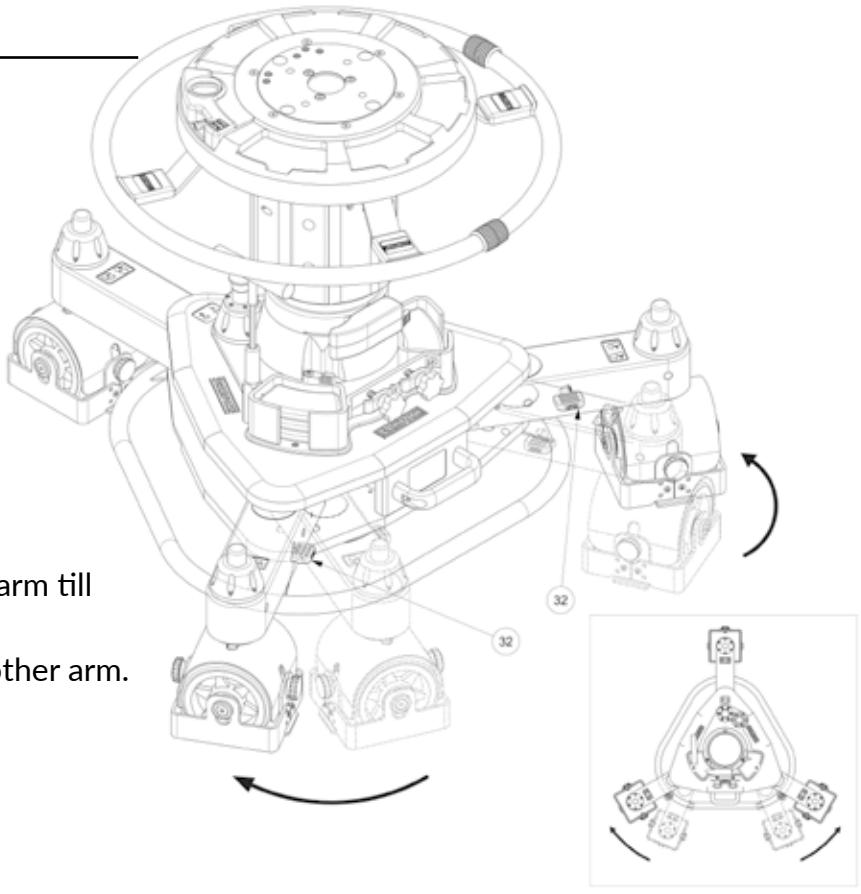

! Ensure that the arms are securely locked in place: push/pull the arms until you hear a click and the position is locked.

Lock the wheels by pushing the red button (9) on each wheel.

! Never insert your hands or fingers under the steering wheel as gears are accessible and they can get trapped and injured.

! There is a potential risk of fingers being trapped between the upper and lower sections of the Pedestal. When the Camera is being lowered and particularly when pressurized air is released; do not insert fingers into this area at such time.

Fix the pan & tilt Fluid Head directly on the top of the Pedestal or – if needed – by using one of the accessories (see 2.2 Compatible equipment – Optional accessories) and secure the 4 (four) retaining bolts underneath the steering wheel with the Allen key.

Place the Camera on the pan & tilt Fluid Head and add all necessary additional equipment (lens, prompter, viewfinder, pan bars, etc).

Place some 2 or 3 trim counterweights on the steering wheel plaque.

Release the safety latch (26).

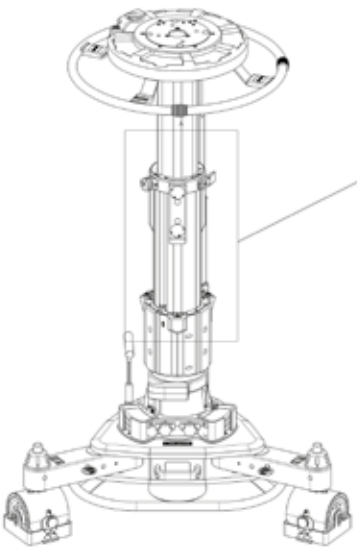

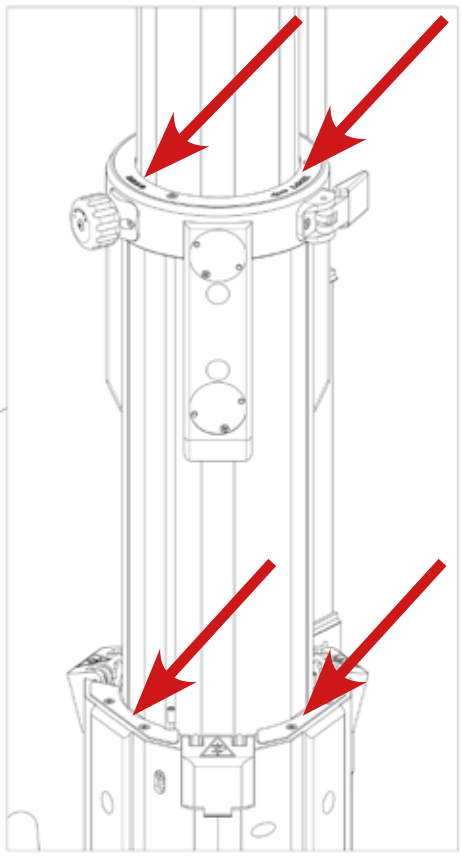

3.2 Pressurizing the Pedestal and Balancing the Load

The compressed air provided to the product must be dry, without oil and dust.

The pneumatic power should be provided through the intake valve (28) using the manual pump which is included with the product or by means an air-compressor.

The column should be filled with clean pressurized air or nitrogen until it compensates the weight of the Camera configuration.

To pressurize the Pedestal connect either the manual air pump provided with the system or an air-compressor to the intake valve (28), by screwing in the pump connection.

Inflate the system until the column rises and reaches and maintains the top upper position.

Remove the air intake connection.

Bleed the air excess, pushing the pin in the intake valve (28) until the Camera moves freely up & down through the entire range of the column stroke.

3.3 Trim Weights

According to variations of the Studio air temperature, the balance could be affected in excess or defect: act on trim weights, adding or removing one or more units, to match the perfect balance.

The Pedestal is supplied with six (6) trim weights of 1,3 Kg (2.9 lbs) each, which can be placed in the seats on the steering wheel plaque. When not needed, the counterweights can be stored in dedicated spaces (14) on the skid.



! Before pressurizing the Pedestal it is necessary to unlock the column by releasing the safety latch (26).

4 Using the Pedestal

4.1 Height Adjustment

When correctly balanced, the column can be used without any resistance throughout the stroke capability.

In case one should need some resistance to the stroke, regulate the column damping by rotating the drag knob (22).

The drag control knob (22) is not a lock or a brake!

Whenever needed, lock the height of the column operating the stroke lock lever (4).

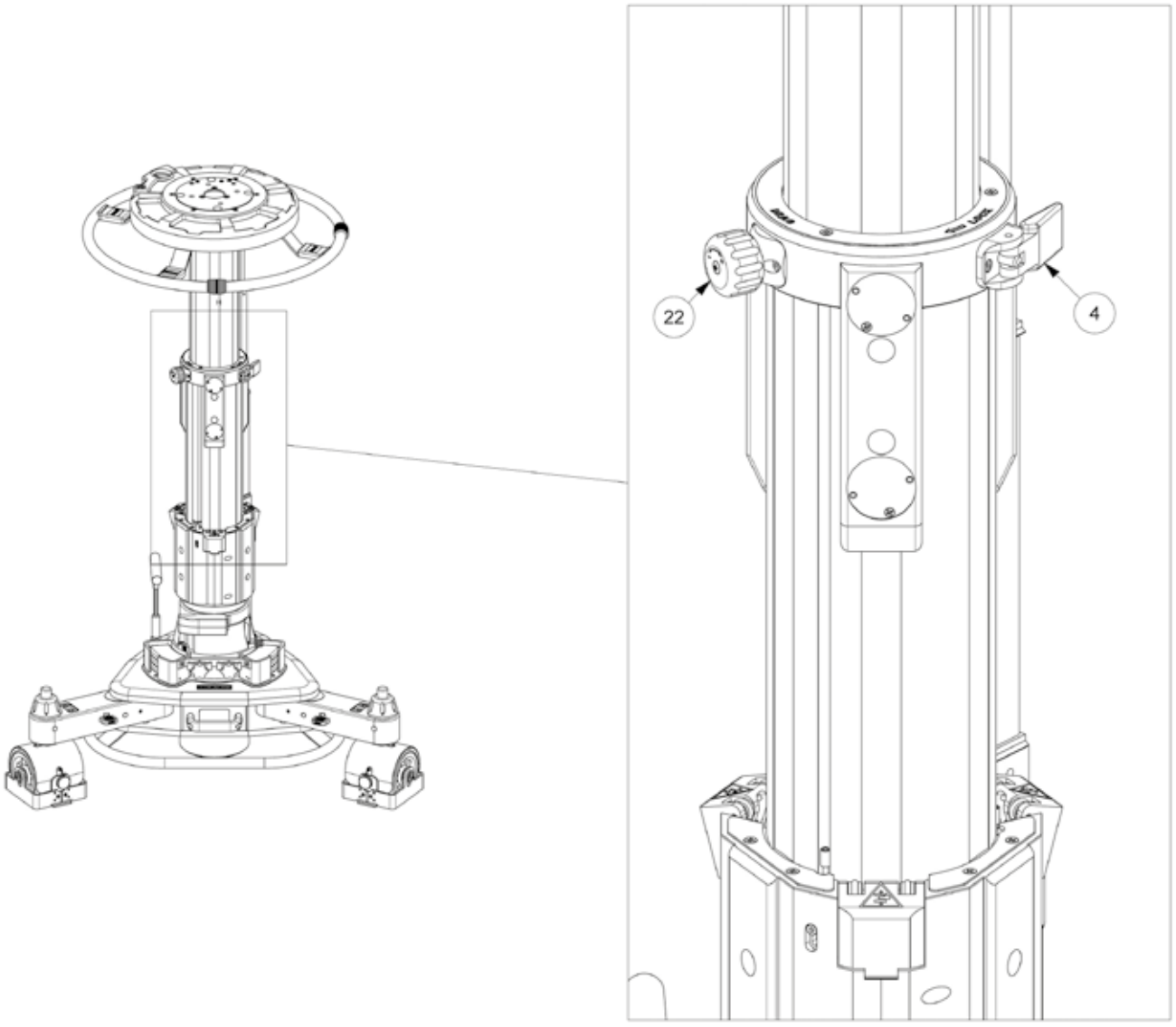

4.2 Cable Guards

If there is interference with cables or other obstacles under the Pedestal rubber wheels, a cable guard (11) has been installed around each wheel to minimize this risk of interference.

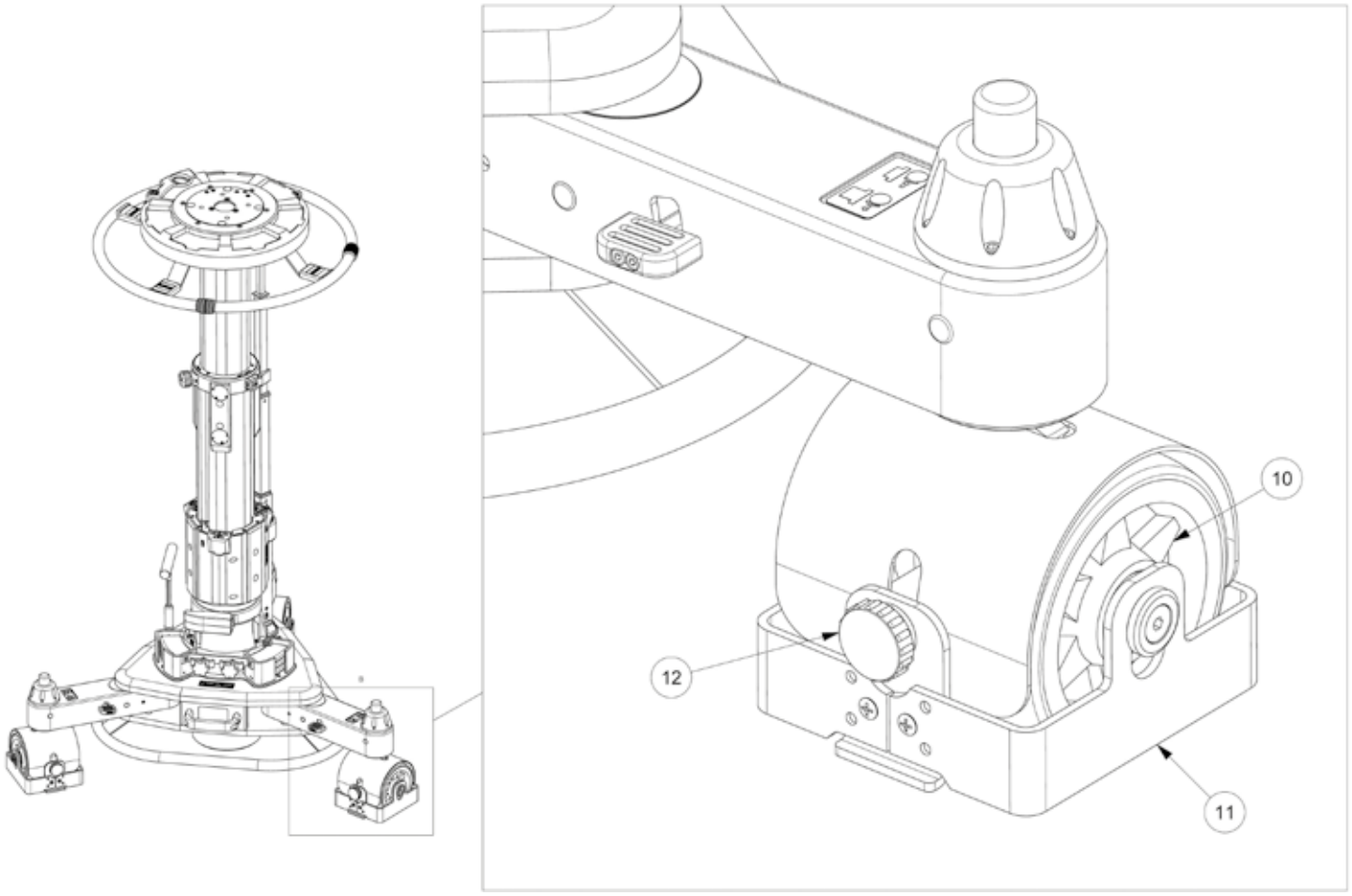

For height regulation from the floor loosen the cable guard knob (12), lift or lower the cable guard (11), then tighten the cable guard knob (12) again. This system allows a variable height of protection from the floor 0 mm to 16 mm. (The zone of interference is equal to 80 mm, complying to prospect 1 (one) of standard UNI EN ISO 13857:2008).

4.3 TRAVELLING

To wheel the Pedestal into position unlock wheels by pressing wheel lock button (9) and simply push it manually using the steering wheel to guide it.

Furthermore, there are two modes to guide the Pedestal;

Only one wheel steering press button “1/3” (5) to position 1;

All three wheels steering gear press button “1/3” (5) to position 3 (crab position).

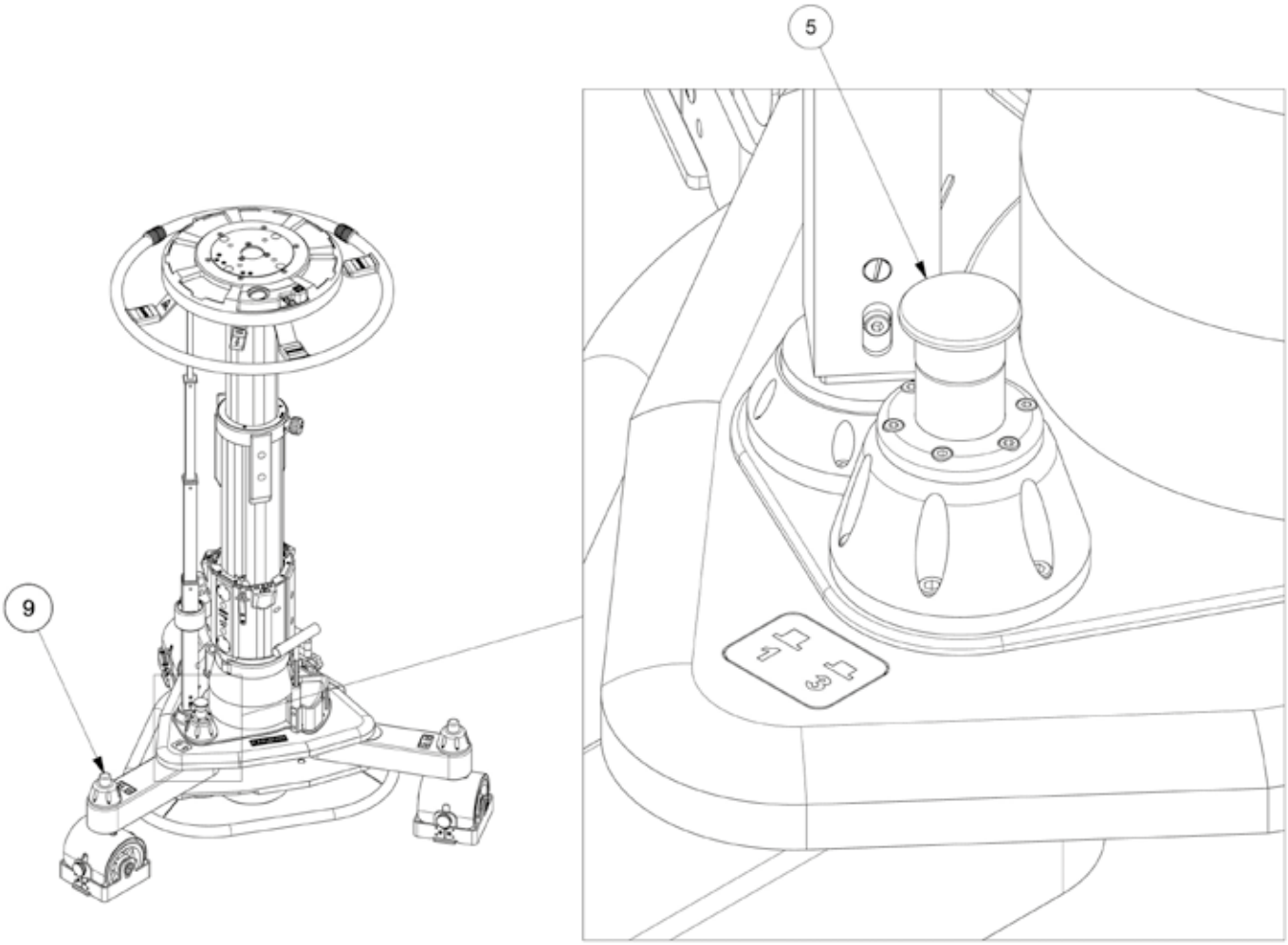

! When switching to 3-wheel steering gear mode it is advised to approximately align the two free wheels in the same direction as the steering gear; turn the steering wheel slowly in order to allow the gears to engage. A brisk operation can compromise the gear engagement and cause the misfunction at the mode exchange mechanism.

! Be careful to avoid hitting objects and persons when moving the Pedestal. Also take care that the wheels do not catch into obstacles (e.g. steps) as might compromise the stability of the Pedestal.

In case one of the wheel units should be displaced and shifted from parallel rolling, due to a bump or hit, proceed as follows:



1) Check the position of the button “1/3 wheel” (5) to position 3;

2) Set the system on a flat even surface;

3) Keep the misplaced wheel unit still, surrounding it with both feet;

4) Turn the steering wheel until the wheel unit engages the chain grip and automati-cally realigns with the other wheels; free the wheel from the feet grip;

5) The sense of rotation is not relevant.

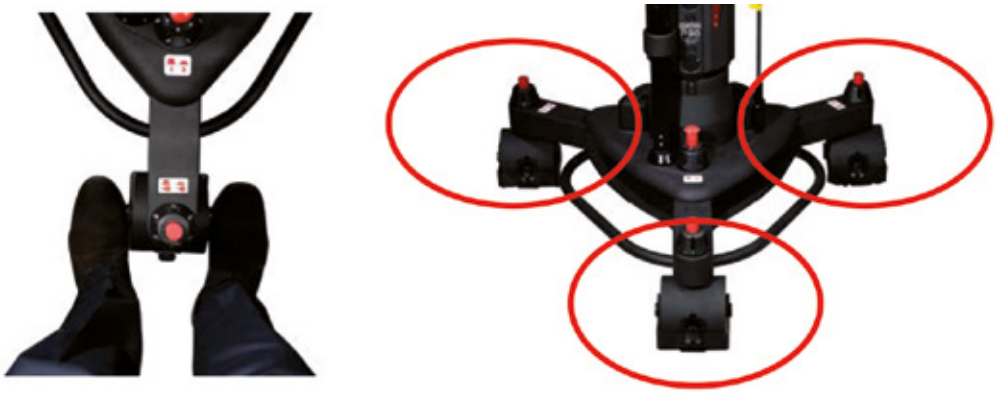

The directional control of the Pedestal can be obtained rotating the steering wheel (2). The three wheels (10) simultaneously rotate and the Pedestal can change its direction to the lateral side.

The steering rotation angle is the same for the steering wheel (2) and the three wheels (10): 90° rotation of the steering wheel will produce 90° rotation of the wheels.

Use the steering wheel red mark (1) to memorize the wheel position.

The Pedestal is equipped with safety systems designed to eliminate the risk of injury to the operators or other surrounding people.



! The Pedestal has been designed to respect ergonomic principles to allow operators to use it without any physical exertion. This includes working conditions with minimum strain, movements, frequency of routines to avoid any physical and psychological discomfort.

! The presence of safety systems does not exonerate Pedestal operators from taking the utmost care to avoid any action that might endanger themselves or their machine. In particular, the operator must never come in contact with the Pedestal moving parts.

! It is absolutely forbidden to modify or remove any of the Pedestal safety systems.

All pneumatic components have been designed for high working precision and will last as long as the Pedestal itself. The pneumatic assembly is located in the internal part of the column and therefore protected from intentional and accidental damages.



! It is absolutely forbidden to modify all the pressure valves in any way whatsoever. Incorrect pressure valve settings could cause malfunctions or breakdowns in the pedestal components and could also seriously endanger its operators.

The column is fitted with a maximum pressure valve, which prevents air pressure rising above maximum level in order to protect the machine from malfunctions or breakdowns.

The maximum pressure valve is set at 15.5 Bar (224.8 Psi) and all column component dimensions have been selected to tolerate an operating pressure up to that level.

In order to prevent the column to rebound when the column lock is improperly released, the column itself is equipped with a system which releases air in a controlled, gradual way to avoid sudden rising.



! The Pedestal must be used according to the instructions indicated in this manual.

The operators must take care to avoid creating potential dangerous situations for both the operator and others.

Anyone who operates the Pedestal must be thoroughly trained in the correct methods of use and its safety features.

Furthermore they must be informed of the present documentation relevant to their work.

During ordinary maintenance to the Pedestal, we recommend to follow the indications in the current section.

! All maintenance on the Pedestal must be carried out by competent and instructed personnel on the operative and safety methods of the Pedestal.

! Do not carry out any maintenance when the Pedestal is moving, and always check that the pressure valve gauge indicates minimum pressure inside the column (consider the minimum value is about 2 bars).

! Items whose center of gravity (CG) is too close to the rim of the castered base (Jib arms) could cause the Pedestal to tip over eventually while moving the Pedestal.

Below are possible residual risks:

! There is a potential risk of trapping your hands between the moving section of the column and the column itself.

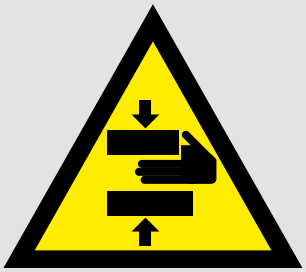

! There is a potential risk of trapping your fingers between the internal transmissions of the gears under the steering wheel. When the movement is directly carried out by the operator.

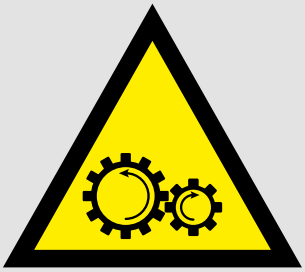

5 Disassembling and Storage

! Before disassembling ensure that the load has been removed and that the trim weights have been placed stored in their dedicated spaces (14).

The Pedestal can be disassembled for transport and storage. Proceed as follows:

- Lock the three wheels with the wheel locks (9).
- Remove the whole load and place the trim weights (13) in their dedicated spaces (14).
- Depressurize the Pedestal till to 1,5/2,0 bar (total bleeding is not compulsory).
- Open the safety latch (26) and push down the column to engage the safety latch (26) to the safety hooking bar (25).
- Push the levers (32) to release the skid arms and rotate the two arms till to the levers (32) click, locking the arms in completely closed position.
- Loosen the column from the skid unlocking the skid clamp (6).
- Vertically lift the column holding it from the steering wheel and extract it from the skid.

To reassemble the Pedestal in order to use it, please proceed as follows.

- Lock the wheels by the wheel lock (9).

- Install the column in the skid, keep the column in vertical position and insert the lower part of the column on the central hole of the skid, positioning the centering pin (15) to match the hole (19) in the skid and the lower part of the steering tube (23) to match the mechanism seat (21) on the skid.

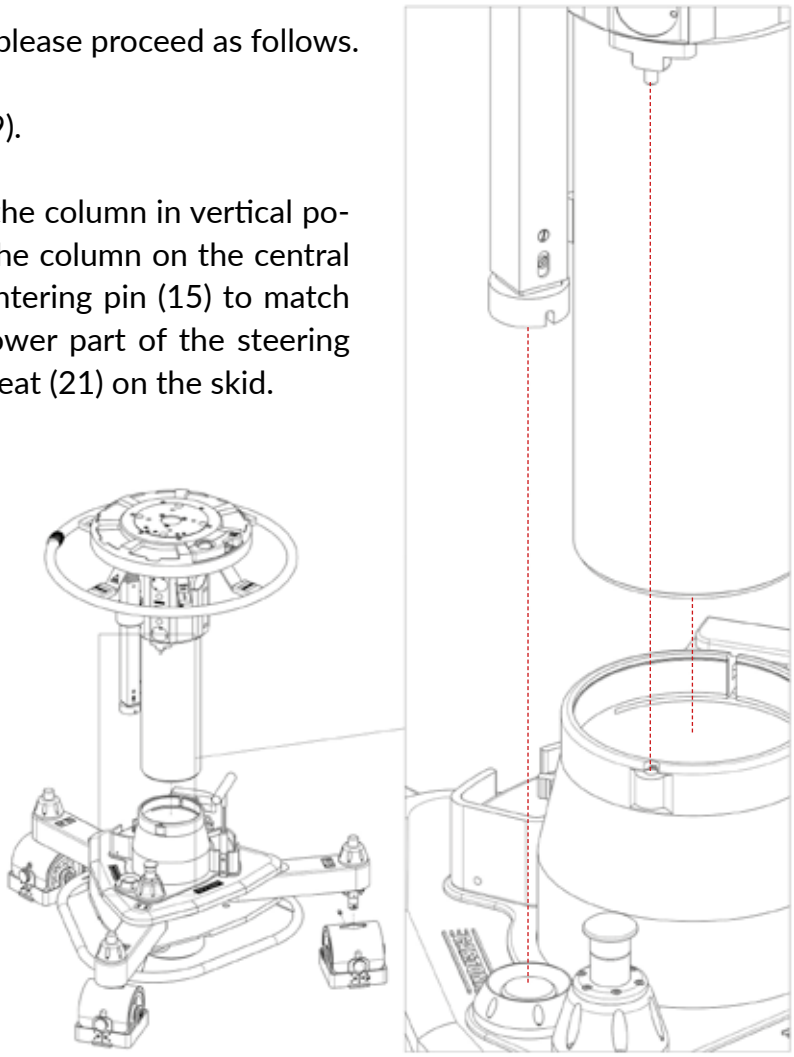

6 Service

The Pedestal has been designed and built in a way to reduce as much as possible any maintenance, and to ensure problem-free efficiency over time.

After any maintenance operation, the Pedestal must be tested to ensure that it is working properly.

! Before starting any maintenance operation the Pedestal must be detached from any air supply line and the column completely depressurized as indicated in section 5.

6.1 Routine Maintenence

The pneumatic system does not require particular maintenance.

It is advisable to check the conditions of the inflating connection and of the in/out valve (28).

Use a damp cloth and no harsh cleaning product to remove dust, grease or other substances. It is particularly important to keep the wheels clean so that they can rotate freely.

Pedestal components should be carefully periodically inspected and any damaged part immediately replaced to prevent failures that might compromise the safety of the Pedestal.

At least once a year the steel ropes need to be lubricated.

Apply 1 ml of silicone lubricant oil on each rope cap (x3) as showed in the figure.

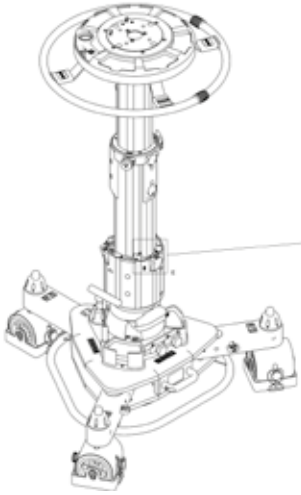

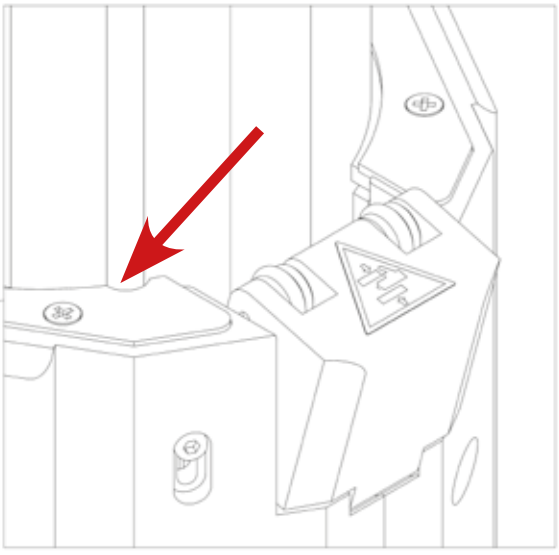

6.2 Extra Maintenance and Spare Parts

Whatever extra maintenance requires to be carried out by **CARTONI**'s own technical servicing staff or an authorized service station appointed by **CARTONI**.

Information on authorized service station staff can be obtained by contacting **CARTONI** or www.cartoni.com.

For fast, effective problem solving **CARTONI** should be informed of the Pedestal model, the serial number and the nature of the defect or its visible symptoms when the problem arises.

! All warranty conditions are invalidated should any repair operation be attempted by anyone not authorized by **CARTONI**.

All spare parts should be ordered from **CARTONI** which will either supply them directly or indicate where they may be obtained.

Remember that repairs should only be carried out by persons employed or authorized by **CARTONI**. All warranty conditions are invalidated should any parts be different from those originally mounted on the Pedestal.

6.3 Wheel Exhange Recommendation

A 160 mm wheel set is available to convert the Pedestal from Studio to OB version. Replace the wheels as follows:

- Remove the column from the skid and turn it upside down;
- Unscrew and remove the grub screws (A) by loosening the wheel group (B) from the shaft (C);
- Remove the three wheel groups (B) including the cable guards;
- Assemble the new wheel groups inserting the shafts (C) and tightening the grub screws (A).

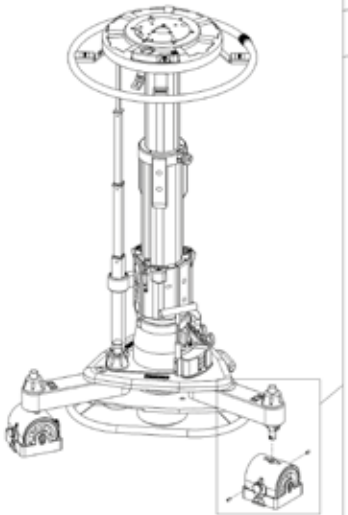

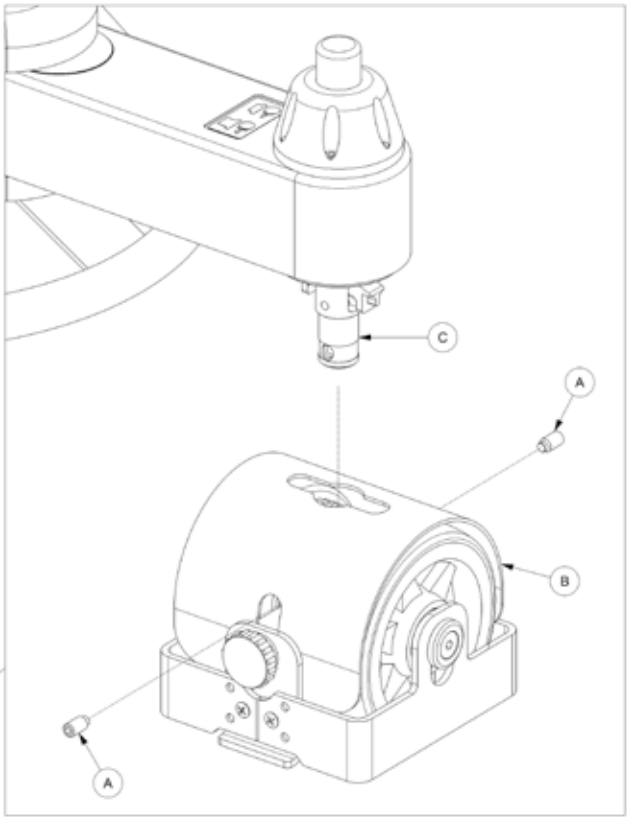

6.4 Decommisioning

In case the Pedestal becomes beyond repair it should be placed of service or at least clearly labeled as “out of order”.

Since the Pedestal is largely made of steel and aluminum, most of its material can be recycled.

Once a Pedestal is decommissioned, it is advisable to separate its various materials for differentiated utilization or disposal.

Since none of the materials used on the Pedestal are toxic or may cause a risk to the health of its operators, they can be handled without the need for any special precautions.

! The dismantling of the Pedestal at the end of its life must be carried out by competent and trained personnel.



CARTONI
PROFESSIONAL CAMERA SUPPORT

CARTONI S.p.A
Via di Portonaccio, 33/B - 00159 Rome (Italy)
Phone +39 06 4382002
Fax +39 06 43588293
Email: cartoni@cartoni.com
www.cartoni.com

Feb/2024