

HYBRID SMPTE AND ARIB HDTV CABLES

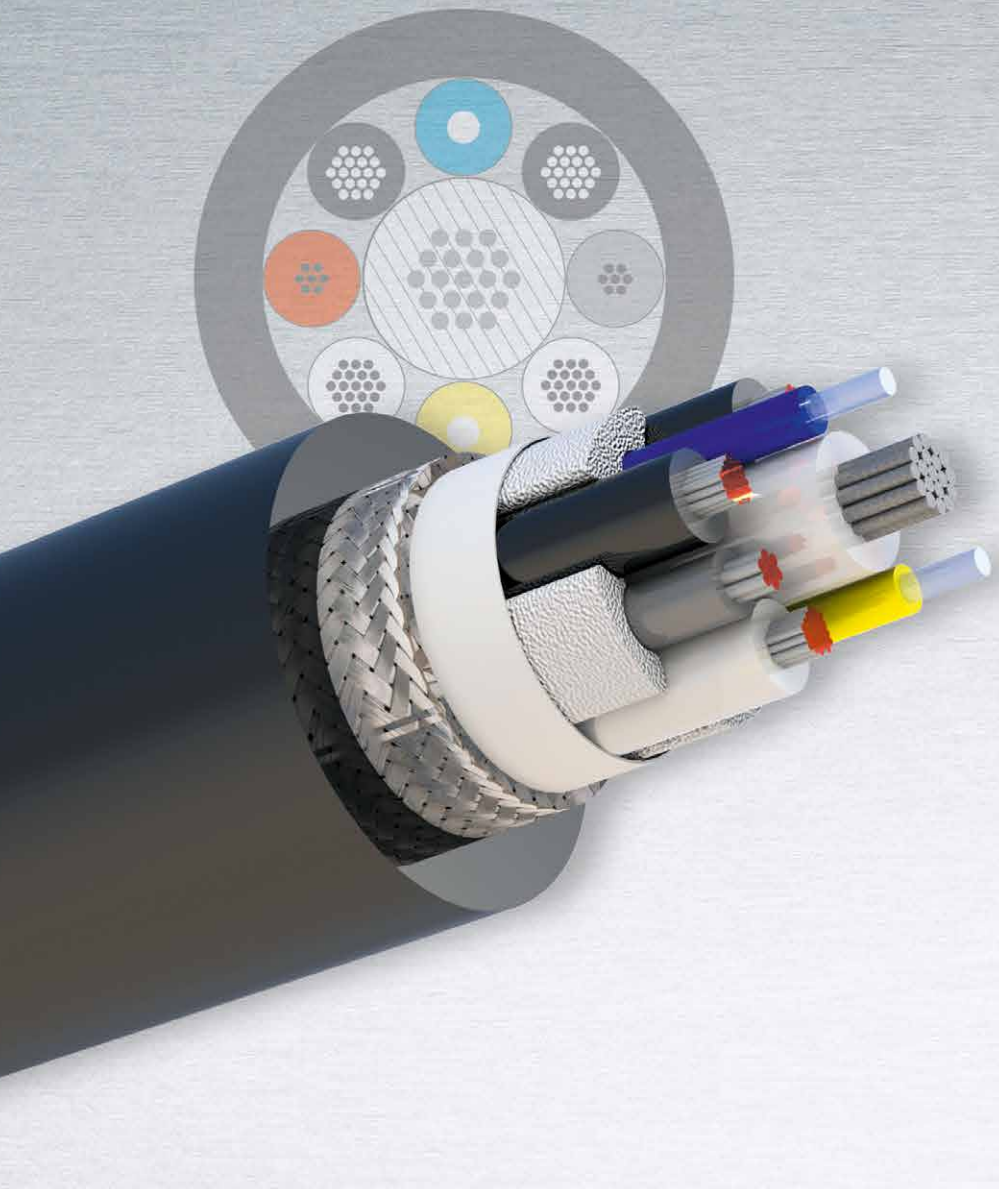

Precision modular connectors to suit your application

Since its creation in Switzerland in 1946 the LEMO Group has been recognized as a global leader of circular Push-Pull connectors and connector solutions. Today LEMO and its affiliated companies, REDEL and COELVER, are active in more than 80 countries with the help of over 40 subsidiaries and distributors.

Over 75000 connectors

The modular design of the LEMO range provides over 75000 connectors from miniature ø 3 mm to ø 50 mm, capable of handling cable diameters up to 30 mm and for up to 114 contacts. This vast portfolio enables you to select the ideal connector configuration to suit almost any specific requirement in most markets, including medical devices, test and measurement instruments, machinery, audio video broadcast, telecommunications and military.

LEMO's Push-Pull Self-Latching Connection System

This self-latching system is renowned worldwide for its easy and quick mating and unmating features. It provides absolute security against vibration, shock or pull on the cable, and facilitates operation in a very limited space.

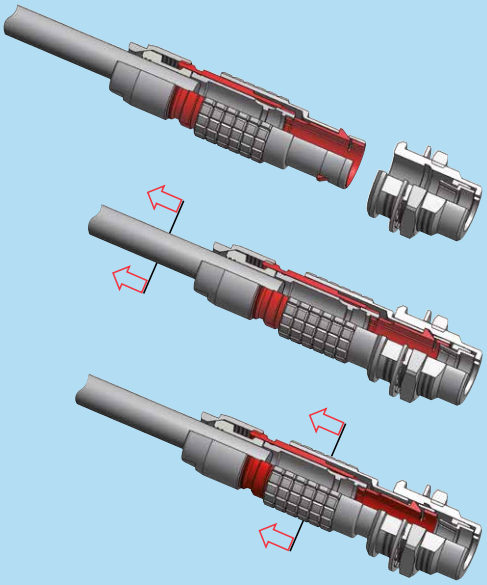

The LEMO self-latching system allows the connector to be mated by simply pushing the plug axially into the socket.

Once firmly latched, connection cannot be broken by pulling on the cable or any other component part other than the outer release sleeve.

When required, the connector is disengaged by a single axial pull on the outer release sleeve.
This first disengages the latches and then withdraws the plug from the socket.

UL Recognition

LEMO connectors are recognized by the Underwriters Laboratories (UL). The approval of the complete system (LEMO connector, cable and your equipment) will be easier because LEMO connectors are recognized.

CE marking

CE marking means that the appliance or equipment bearing it complies with the protection requirements of one or several European safety directives. CE marking applies to complete products or equipment, **but not to electromechanical components, such as connectors**.

RoHS

LEMO connector specifications conforms the requirements of the RoHS directive (2011/65/EU) of the European Parliament and the latest amendments. This directive specifies the restrictions of the use of hazardous substances in electrical and electronic equipment marketed in Europe.

Product safety notice & disclaimers

Please read and follow all instructions specified on the last page or on our website carefully and consult all relevent national and international safety regulations for your application. Improper handling, cable assembly, or wrong use of connectors can result in hazardous situations.

LEMO products and services are provided "as is." LEMO makes no warranties or representations with regard to LEMO product & services or use of them, express, implied or statutory, including for accuracy, completeness, or security.

In no event shall LEMO be liable for any direct, indirect, punitive, incidental, special consequential damages, to property or life, whatsoever arising out of or connected with the use or misuse of LEMO's products.

NORTHWIRE™ HDTV cables

NORTHWIRE hybrid camera cable according to SMPTE 311 and ARIB standards

This composite cable combines power conductors for TV camera, control wires, and optical fibres for video and audio transmission in a single cable. Specially designed to cope with the heavy demands of outside broadcast. The cable fully meets the requirements of the SMPTE 311M standard for camera cables. Primary features and benefits of this cable are:

- High durability construction.
- Excellent flexing and twist capability coping with rough handling by rigging crews.
- Superior load bearing capabilities – can be driven over by trucks whilst in operation.
- High tensile strength.

PVC (-20°C/+80°C)

Commercial quality – SMPTE 311M standard cable
CFN.3K.93C.092PNCS (multipurpose)
CFN.3K.93C.160PNCS (studio application)
CFN.3K.93C.068PNCS (6.8mm not SMPTE 311M)

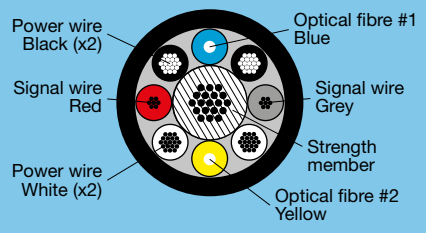

PVC (-20°C/+80°C)

High quality – ARIB standard cable
CFN.3K.93C.092PNCA (multipurpose)
CFN.3K.93C.160PNCA (studio application)

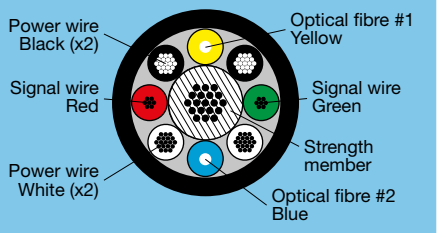

PUR (LSZH) (-40°C/+80°C)

High flex quality – for studio or low temperature
CFN.3K.93C.092UNCS (SMPTE 311M)
CFN.3K.93C.092UNCK (Aramid strength member similar to Kevlar®)

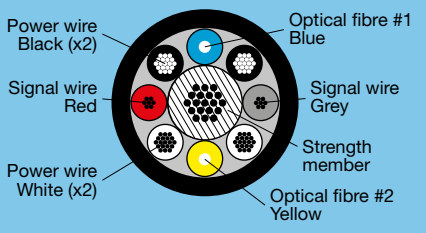

Cable specification

Core type	Power (Aux)	Control (Signal)	Optic fibre	Strength member
Nb of cores	4	2	2	1
Conductor sizes - AWG	20	24	–	–
Conductor construction - Nb/mm	19/0.185	7/0.193	–	19/0.330
Mode field diameter - µm	–	–	8.9 ± 0.8 at 1310	–
Cladding diameter - µm	–	–	125 ± 1 µm	–
Approx. diameter of conductor - mm	0.88	0.58	–	1.75
Nominal insulation thickness - mm	0.41	0.30	–	0.38
Approx. core diameter - mm	1.72	1.22	0.9	2.51
Approx. thickness of tin-coated annealed copper braid - mm	0.127			
Nominal thickness of jacket - mm	1.14			
Approx. overall diameter - mm	9.2			
Approx. net weight - g/m7	137			
Max. conductor resistance - (20°C) Ω/km	43	184 (SMPTE)	–	–
AC withstanding voltage - Vrms at 60 Hz, 1 min	1750	1750 (SMPTE)	–	–
Min. insulation resistance - (20°) MΩkm	10'000	10'000	–	–
UL Listing	AWM STYLE 21971			
Allowable tension	700N			
Temperature range (PUR version)	-40°C / +80°C			
Temperature range (PVC version)	-20°C / +80°C			
Bending radius PVC version (mm)	55			

Cable specification (optical fibre)

Item	Wavelength	Characteristics	Conversion condition (km)	Conversion formula
Transmission loss	λ = 1.31 µm	Less than .8 dB/km	up to ≥ 0.4	0.5xLdB≥
	λ = 1.31 µm	Less than .8 dB/km	L < 0.4	0.5x0.4dB≥

Hybrid HDTV fibre optic cable part number

SMPTE standard

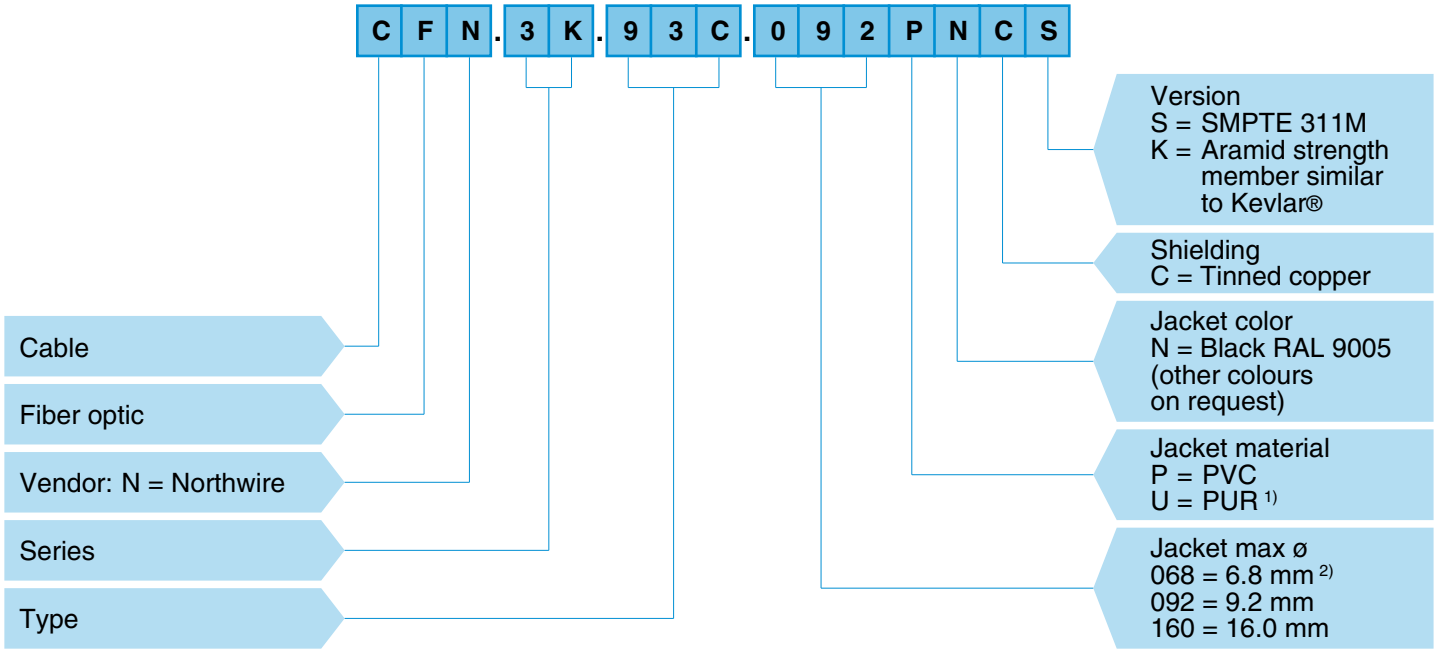

Note: 1) PUR outer jacket for high flex and LSZH (Low smoke zero halogen). Recommended for cold temperatures (-40°C).
2) Recommended for assembly length up to 5 meters.

ARIB standard

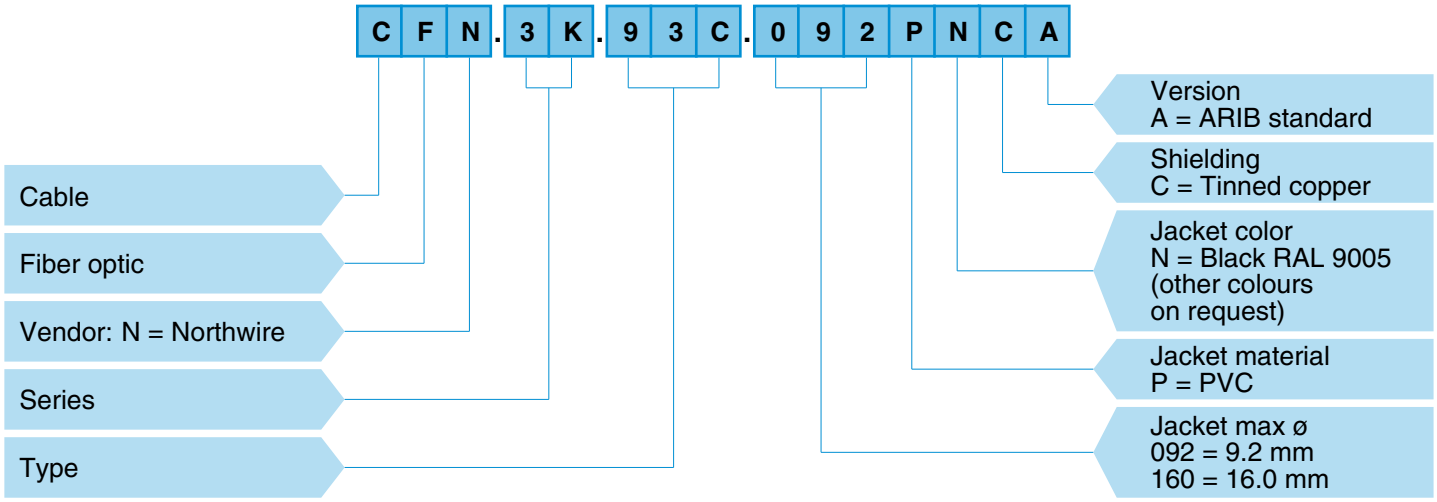

Cable assembly

Part Number Example

Cable

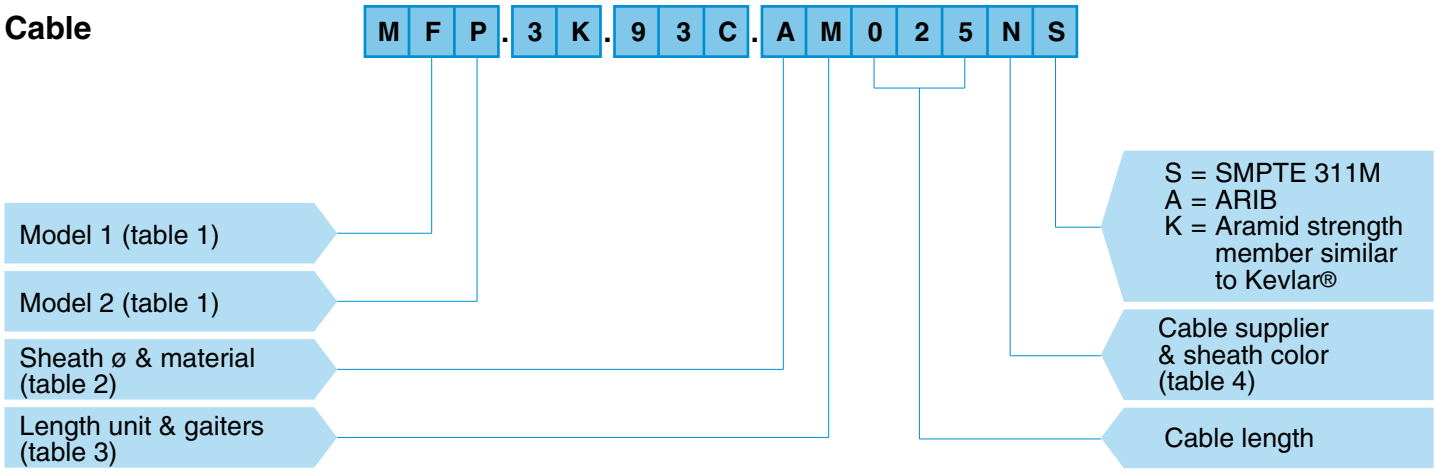

MFP.3K.93C.AM025NS = 1 FUW plug and 1 PUW socket (key W), 3K.93C series, on a SMPTE 311M screened cable, 25 m length, sheath ø 9.2 mm, black RAL 9005 jacket color, with GMF/GMP bend relief with cap.

Table 1
Model

Model 1 & 2	Code
FUW	F
FMW	M
PUW	P
PEW	E
PBW	B

Table 2
Sheath ø & material

Sheath ø (mm)	Code PVC [1]	Code PUR
9.2	A	R
4.2	B	S
6.8	C	T
12.0	D	U
16.0	E	V

Table 3
Length unit & gaiters

	No Gaiter	Red gaiter free socket Green gaiter plug	2 black gaiters	2 yellow gaiters
cm	C	E		
dm	D	F		
m	M	G	N	J
km	K	L		
inch	I			
feet	T			

Table 4
Cable supplier & sheath color

Code	Cable supplier & sheath color
N	Northwire Black
G	Northwire Grey
A	Northwire Blue
F	Furukawa Black
B	Belden Black

Note: [1] PVC not recommended for temperatures below -20°C.

MFP Outside broadcast cable assembly

Assembly cable with one straight plug (FUW) and one straight socket (receptacle) (PUW), both complete with GMF/GMP bend relief with cap.

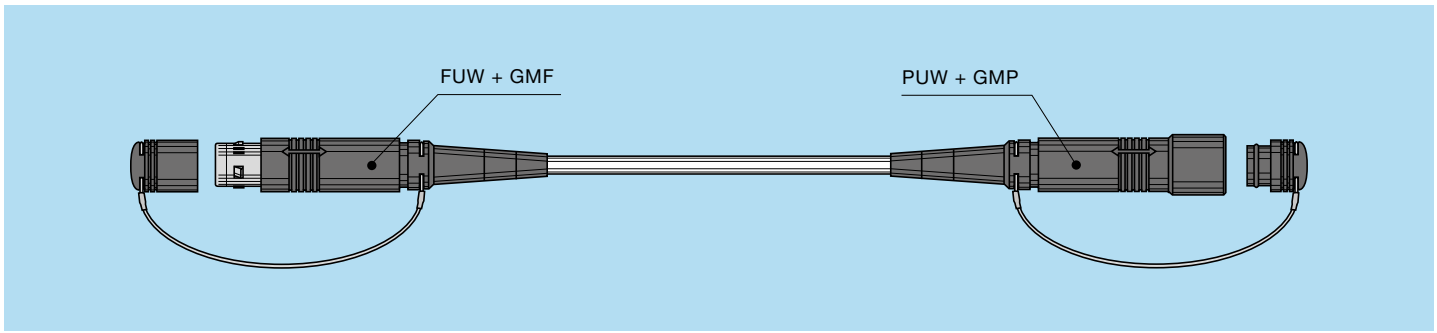

MFP Outside broadcast cable assembly

Assembly cable with one straight plug (FUW) and one straight socket (receptacle) (PUW), both complete with GMF/GMP bend relief with cap and gaiters.

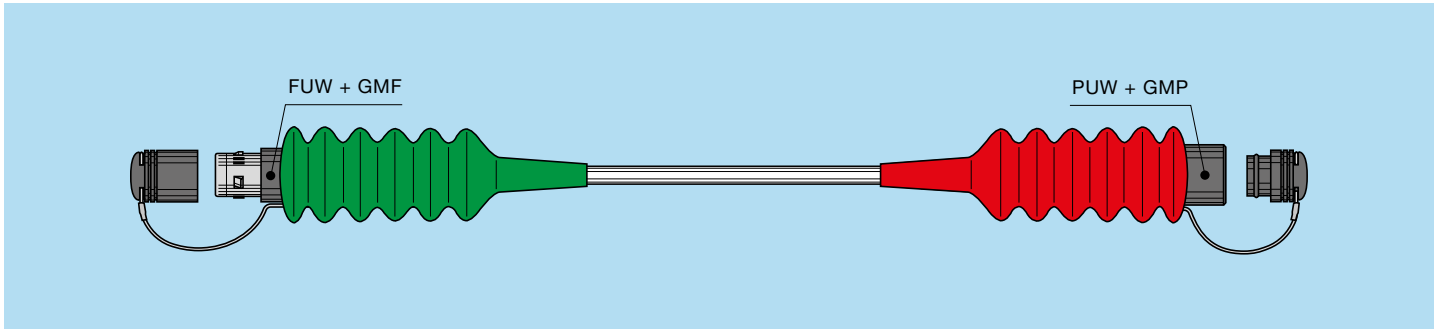

MMP Internal OB van cable assembly

Assembly cable with one fixed plug (FMW) and one straight socket (receptacle) (PUW), both complete with BHA/BRF caps.

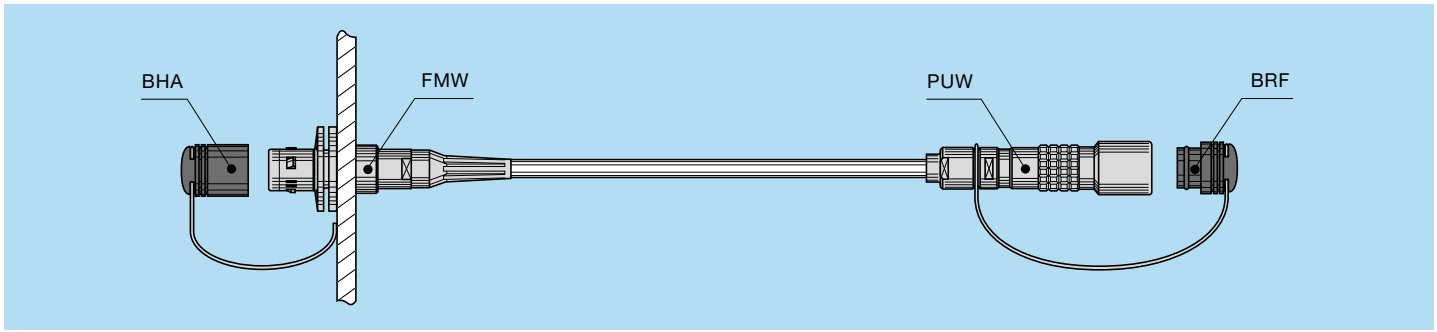

MME Studio/Infrastructure cable assembly

Assembly cable with one fixed plug (FMW) and one straight socket (receptacle) (PEW), complete with BHA cap.

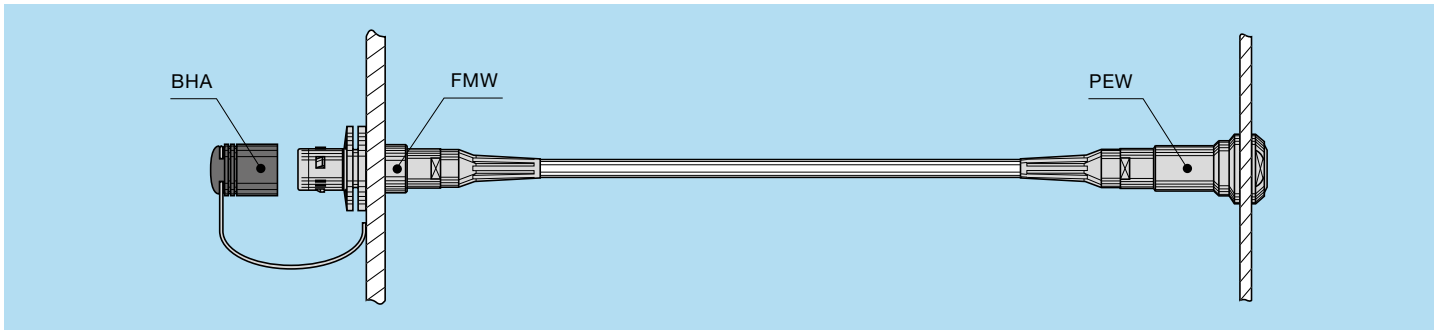

Part Number Example

Pigtails

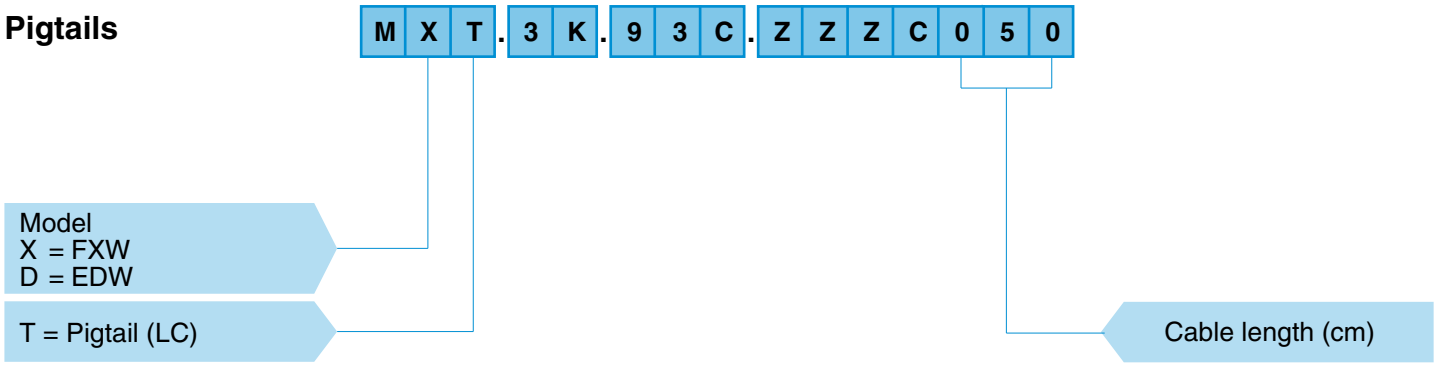

MXT.3K.93C.ZZZC050 = 1 FXW plug (key W), 3K.93C series and one pigtail (LC) on the other side, 50 cm length.

MXT ECU side pigtails

Assembly cable with one fixed plug (FXW) and one pigtail (LC) complete with BHA cap.

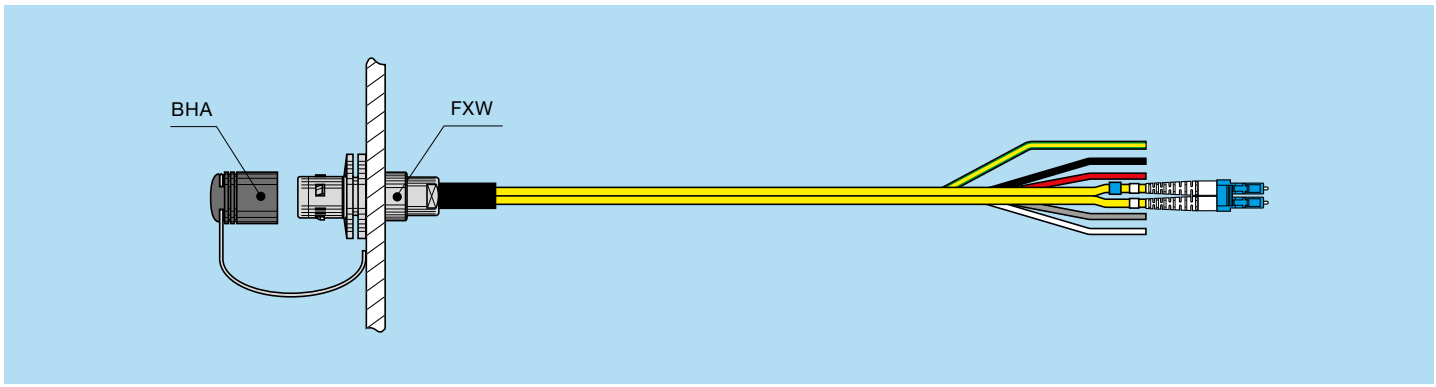

MDT Camera side pigtails

Assembly cable with one fixed socket (EDW) and one pigtail (LC) complete with BRA cap.

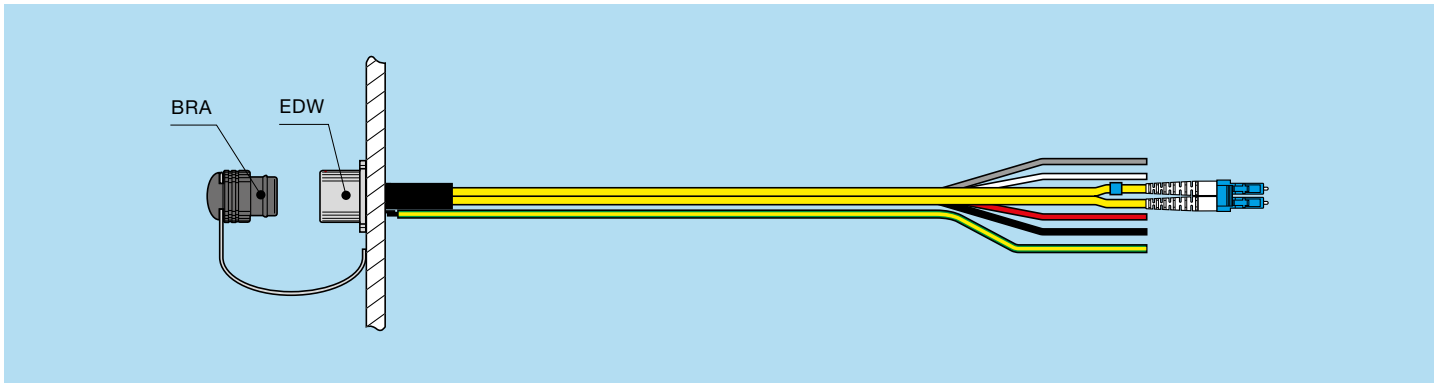

SMPTE 311M standard cable assemblies

Outside Broadcast FUW-PUW

Part number	Description
MFP.3K.93C.AM025NS	25 meter length
MFP.3K.93C.AM050NS	50 meter length
MFP.3K.93C.AM100NS	100 meter length
MFP.3K.93C.AM200NS	200 meter length
MFP.3K.93C.AM300NS	300 meter length
MFP.3K.93C.AM400NS	400 meter length
MFP.3K.93C.AM500NS	500 meter length

Internal OB van

Part number	Description
MMP.3K.93C.AM003NS	3 meter length
MMP.3K.93C.AM005NS	5 meter length
MMP.3K.93C.AM010NS	10 meter length
MMP.3K.93C.AM015NS	15 meter length
MMP.3K.93C.AM020NS	20 meter length

Studio/Infrastructure

Part number	Description
MME.3K.93C.AM020NS	20 meter length
MME.3K.93C.AM050NS	50 meter length

ARIB standard cable assemblies

Outside Broadcast FUW-PUW

Part number	Description
MFP.3K.93C.AM025NA	25 meter length
MFP.3K.93C.AM050NA	50 meter length
MFP.3K.93C.AM100NA	100 meter length
MFP.3K.93C.AM200NA	200 meter length
MFP.3K.93C.AM300NA	300 meter length
MFP.3K.93C.AM400NA	400 meter length
MFP.3K.93C.AM500NA	500 meter length

Internal OB van

Part number	Description
MMP.3K.93C.AM003NA	3 meter length
MMP.3K.93C.AM005NA	5 meter length
MMP.3K.93C.AM010NA	10 meter length
MMP.3K.93C.AM015NA	15 meter length
MMP.3K.93C.AM020NA	20 meter length

Studio/Infrastructure

Part number	Description
MME.3K.93C.AM020NA	20 meter length
MME.3K.93C.AM050NA	50 meter length

Other cable assemblies, patch cords and pig tails available on request.

Note

Note

Product safety notice

PLEASE READ AND FOLLOW ALL INSTRUCTIONS CAREFULLY AND CONSULT ALL RELEVENT NATIONAL AND INTERNATIONAL SAFETY REGULATIONS FOR YOUR APPLICATION.
IMPROPER HANDLING, CABLE ASSEMBLY, OR WRONG USE OF CONNECTORS CAN RESULT IN HAZARDOUS SITUATIONS.

1. **SHOCK AND FIRE HAZARD**
   Incorrect wiring, the use of damaged components, presence of foreign objects (such as metal debris), and / or residue (such as cleaning fluids), can result in short circuits, overheating, and / or risk of electric shock.
   Mated components should never be disconnected while live as this may result in an exposed electric arc and local overheating, resulting in possible damage to components.

2. **HANDLING**
   Connectors and their components should be visually inspected for damage prior to installation and assembly. Suspect components should be rejected or returned to the factory for verification.
   Connector assembly and installation should only be carried out by properly trained personnel. Proper tools must be used during installation and / or assembly in order to obtain safe and reliable performance.

3. **USE**
   Connectors with exposed contacts should never be live (or on the current supply side of a circuit). Under general conditions voltages above 30 VAC and 42 VDC are considered hazardous and proper measures should be taken to eliminate all risk of transmission of such voltages to any exposed metal part of the connector.

4. **TEST AND OPERATING VOLTAGES**
   The maximum admissible operating voltage depends upon the national or international standards in force for the application in question. Air and creepage distances impact the operating voltage; reference values are indicated in the catalog however these may be influenced by PC board design and / or wiring harnesses.
   The test voltage indicated in the catalog is 75% of the mean breakdown voltage; the test is applied at 500 V/s and the test duration is 1 minute.

5. **CE MARKING** CE
   CE marking CE means that the appliance or equipment bearing it complies with the protection requirements of one or several European safety directives.
   CE marking CE applies to complete products or equipment, **but not to electromechanical components, such as connectors**.

6. **PRODUCT IMPROVEMENTS**
   The LEMO Group reserves the right to modify and improve to our products or specifications without providing prior notification.

7. ⚠ **WARNING (Prop 65 State of California)**
   Proposition 65 requires businesses to provide warnings to Californians about significant exposures to chemicals that cause cancer, birth defects or other reproductive harm. LEMO products are exempt from proposition 65 warnings because they are manufactured, marketed, and sold solely for commercial and industrial use. For further information, please visit https://www.lemo.com/quality/LEMO-Prop-65-compliance-declaration.pdf.

Disclaimers

LEMO works constantly to improve the quality of its products; the information and illustrations figuring in this document may therefore vary and are not binding. In any case, LEMO makes no specific warranty of merchantability, fitness for a particular purpose, third party components as such or included in assembly, non-infringement, title, accuracy, completeness, or security. The user is fully responsible for his products and applications using LEMO component.

In no event shall LEMO, its affiliates, officers, agents or employees be liable for any incidental, indirect, special or consequential damages in connection with the products or services provided by LEMO, including (without limitation) loss of profits or revenues, interruption of business, loss of use of the products or any associated equipment, materials, components or products, damages to associated equipment or in combination with other components, materials.

Reproduction of significant portions of LEMO information in LEMO data books or data sheets is permissible only if reproduction is without alteration and is accompanied by all associated warranties, conditions, limitations, and notices. LEMO is not responsible or liable for such altered documentation. Information of third parties may be subject to additional restrictions.

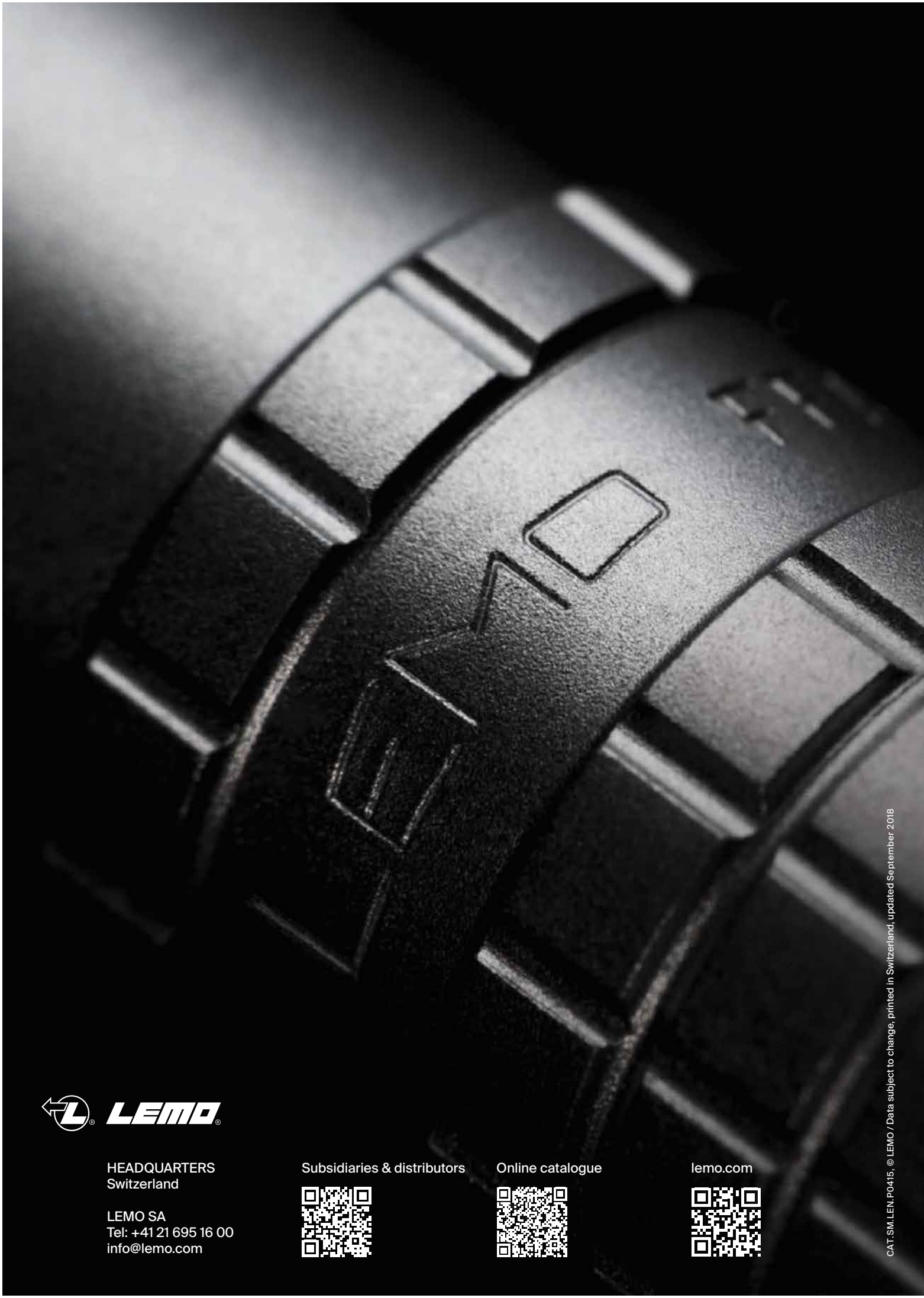

LEMO

HEADQUARTERS
Switzerland

LEMO SA
Tel: +41 21 695 16 00
info@lemo.com

Subsidiaries & distributors

Online catalogue

lemo.com

CAT.SM.LEN.P0415. © LEMO / Data subject to change, printed in Switzerland, updated September 2018